arXiv:cond-mat/9701074v3 [cond-mat.supr-con] 16 Sep 1997

Weak gravitation shielding properties of composite bulk $YBa_2Cu_3O_{7-x}$ superconductor below 70 K under e.m. field.

E.E. Podkletnov

Moscow Chemical Scientific Research Centre

113452 Moscow - Russia

Abstract

A high-temperature $YBa_2Cu_3O_{7-x}$ bulk ceramic superconductor with composite structure has revealed weak shielding properties against gravitational force while in a levitating state at temperatures below 70 K. A toroidal disk with an outer diameter of 275 mm and a thickness of 10 mm was prepared using conventional ceramic technology in combination with melt-texture growth. Two solenoids were placed around the disk in order to initiate the current inside it and to rotate the disk about its central axis. Samples placed over the rotating disk initially demonstrated a weight loss of 0.3-0.5%. When the rotation speed was slowly reduced by changing the current in the solenoids, the shielding effect became considerably higher and reached 1.9-2.1% at maximum.

74.72.-h High-T_c cuprates.

1 Introduction.

The behavior of high-T_c ceramic superconductors under high-frequency magnetic fields is of great interest for practical applications. Crystal structure seems to be the key factor determining all physical properties of bulk superconductors, and the interaction of this structure with

external and internal e.m. fields might result in quite unusual effects. Despite a large number of studies [1, 2, 3] the nature of these interactions still remains unresolved.

Our recent experimental work [4] clearly indicated that under certain conditions single-phase bulk, dense $YBa_2Cu_3O_{7-x}$ revealed a moderate shielding effect against gravitational force. In order to obtain more information about this unusual phenomenon, a new installation was built, enabling operation with larger disks (275 mm in diameter), in magnetic fields up to 2 T and frequencies up to 10^8 Hz at temperatures from 40 to 70 K. A new experimental technique was employed to modify the structure of the ceramic superconductor. All these efforts yielded a larger value of the shielding effect (up to 0.5% in stationary conditions and to 2.1% for shorter periods), providing good hopes for technological applications.

A gravitational shielding effect of this strength has never been previously observed, and its implications present serious theoretical difficulties (see [11] for references and an analysis of some hypotheses). Thus, great attention was devoted to the elimination of any possible source of systematic errors or of spurious non-gravitational effects. The small disturbances due to air flows pointed out by some authors [9, 10] were eliminated by weighing the samples in a closed glass tube (see Section 4). The entire cryostat and the solenoids were enclosed in a stainless steel box. But probably the best evidence for the true gravitational nature of the effect is that the observed weight reductions (in %) were independent of the mass or chemical composition of the tested samples (Section 6).

This work is organized as follows. Sections 2 and 3 describe our experimental setup. Section 2 summarizes the main steps in the sinterization of the composite ceramic disk and contains information about the final properties of the disk (T_c for the two layers, J_c for the upper layer, etc.) and about the microscopic structure of the material. Section 3 describes how we obtain and control the levitation and rotation of the disk, up to an angular speed of about 5000 rpm. In Section 4 we describe the weight measurement procedure and analyze in detail possible error sources and parasitic effects. Several checks were performed to exclude any influence of spurious factors (Section 5). In Section 6 we give the maximum % shielding values obtained in dependence on the rotation speed of the disk and on the frequency of the applied magnetic field. Finally, Sections 7 and 8 contain a short discussion and our conclusions.

According to public information, a NASA group in Huntsville, Alabama, is now attempting to replicate our experiment. This is a difficult task, especially in view of the sophisticated

technology involved in the construction of the large ceramic disk and in the control of its rotation. We are also aware, through unofficial channels, that other groups are working on similar experiments with smaller disks.

2 Construction of the disk.

The shielding superconducting element was made of dense, bulk, almost single-phase $YBCO$ and had the shape of a toroidal disk with an outer diameter of 275 mm, an inner diameter of 80 mm, and a thickness of 10 mm. The preparation of the 123-compound and fabrication of the disk involved mixing the initial oxides, then calcining the powder at 930^0 C in air, grinding, pressing the disk at 120 MPa, and sintering it in oxygen at 930^0 C for 12 hours with slow cooling to room temperature. After that, the disk was put back in the furnace at 600^0 C, and the upper surface was quickly heated to 1200^0 C using a planar high-frequency inductor as shown in Figure 1. During this last heating, the gap between the disk and the inductor was chosen precisely so that heating would occur only in the top 2 mm-thick layer of the disk, although the material's high heat conductivity caused some heating below this region. Finally, the disk was slowly cooled down to room temperature in a flow of oxygen and treated mechanically in order to obtain good balance during rotation. A thin (1 mm) foil of magnetic material was attached (without electric contact) to the upper surface of the disk, using hot-melt adhesive, to facilitate rotating the disk as described below, especially at the initial stages of rotation.

The phase and crystal structure of the superconductor were studied using X-ray diffraction analysis (XRD) and a scanning electron microscope (SEM) equipped with an energy dispersive spectral (EDS) analyzer. The samples were cut layer by layer from the bulk ceramic disk.

The analysis of the cross-section of the ceramic $YBa_2Cu_3O_{7-x}$ disk revealed the existence of two zones with different crystal structures. The upper part of the disk (6-7 mm thick) had an orthorhombic structure typical of the quench and melt growth process [5, 6] and consisted mainly of single-phase orthorhombic 123-compound. This material was dense, with uniformly fine grain boundaries, i.e. no impurities or secondary phases were found between the grains. Inter-grain boundaries were barely visible, indicating that there were good electrical contacts between the particles of the superconducting body and that the sintering of the material had

produced a nearly perfect polycrystal lattice with no apparent defects.

The grains were less than 2 μm wide and were oriented (about 75%) with c-axis parallel to the surface of the disk. The transition temperature T_c for this region of the disk was found by direct measurements to be 94 K, with a width of 1.5-2 K. T_c was determined from the resistive transition in a variable temperature cryostat, under zero magnetic field, using an AC current and sputtered golden contacts.

The lower part of the disk, which was in contact with a water-cooled base during the high-frequency heat treatment, had a markedly different structure: randomly oriented grains, with typical grain sizes between 5 and 15 μm. The porosity of this zone varied from 5 to 9% and the material contained about 40% of the tetragonal phase. The transition temperature T_c was equal to 60 K, with a width of ca. 10 K. EDS analysis showed the presence of small inclusions of Y_2BaCuO_5 in the lower layer.

Crystal lattice parameters for these two layers, as calculated from XRD, are listed below. These are dimensions in nm:

Upper layer: a=0.381; b=0.387; c=1.165;

Lower layer: a=0.384; b=0.388; c=1.170 (orthorhombic phase);

a=0.387; c=1.183 (tetragonal phase).

The critical current density was measured for samples cut from the top of the superconducting disk. Measurements of J_c were carried out at 75 K using an AC current, four-probe method, and direct transport measurements. The accuracy for J_c determination was defined as 1 $\mu V/cm$ in a zero magnetic field, with the sample immersed in liquid nitrogen. It turned out that J_c exceeded 15000 A/cm^2. The value of J_C for the lower part of the disk was not measured, since it is not superconducting at the temperature of operation.

We also estimated the current density in the upper part of the disk while subjected to the magnetic fields usually applied during the measurements. To measure this we made a thin radial cut through the sample disk and attached electric contacts to an ampermeter, with a tecnique allowing fast on/off switching. We calibrated the currents in the driving coils that correspond to the currents inside the disk. These currents are slightly different for each new disk as the thickness of the SC part is not the same in every new sintered ceramic toroid, but we estimate their density to range between 5000 and 7000 A/cm^2.

3 Operation of the apparatus.

Two identical solenoids were placed around the superconductor using fibreglass supports, as shown in Figures 2, 4, 5. The gaps between these solenoids and the disk were large enough for it to move about 20 mm in any lateral direction. The toroidal disk was placed inside a cryostat equipped with a set of three coils (Fig. 3) that could keep it levitating when it reached the superconducting state. The angle β was between 5 and 15 degrees. This helped to keep the rotating disk in a stable position, otherwise it tended to slip aside.

A schematic of the electrical connections is shown in Fig. 6. High-frequency electric current (10^5 Hz) was first sent to the two main solenoids around the disk to initiate an internal current in the ceramics while the disk was still at room temperature. Then the system was slowly cooled down to 100 K by liquid nitrogen, and then quickly cooled by liquid helium vapors. We estimate the temperature of the disk to be lower than 70 K in stationary conditions. Thus the upper layer of the disk is superconducting in these conditions, while the lower layer is not. The main solenoids were switched off. After this, the high-frequency current was sent to the coils below the disk, and the superconductor raised up (at least 15 mm; see Section 6).

Then a small current (10^5 Hz) was sent to the main solenoids, causing the disk to begin rotating counter-clockwise with increasing speed. The rotation speed was increased up to 5000 rpm. At this point the current in the rotating coils was of the order of 8-10 A. (The diameter of the wire of these coils is 1.2 mm). This current was supplied by powerful high-frequency generators usually employed for induction heating and quenching of metals.

Most weight measurements for various objects were taken in these conditions, which can be maintained in a stable way for quite long periods (10 minutes or more). Next, the disk's rotational speed was slowly reduced by changing the current in the main solenoids (Fig. 9). The speed of rotation was regulated by means of laser beam reflections off a small piece of plastic light-reflecting foil attached to the disk.

The frequency of the e.m. field was varied from 10^3 to 10^8 Hz. Samples made of various materials were tested, including metals, glass, plastic, wood and so on. All the samples were hung over the cryostat on a cotton thread connected to a sensitive balance. The distance between the samples and the cryostat varied from 25 to 3000 mm.

4 Weight measurements. Error sources.

To measure the weight loss of the samples, we used a Dupont balance that is a part of the standard equipment for DTA and TGA (differential thermal analysis, thermo-gravimetric analysis). One of the two arms of the balance, holding the sample to be weighed, was lying within the vertical projection of the HTC disk (we call this region the "shielding cylinder"), while the other arm was well outside. The arms of the balance were up to 220 cm long. The sensitivity of the balance for masses of 10-50 g, like those employed in the measurements, is on the order of 10^{-6} g, which was sufficient to detect the observed weight loss. Three different balances were used for verification and are described below (see "Checks", Section 5).

The main error sources in the weight measurements were the following.

1. *Buoyancy and air flow.* The presence of the cryostat perturbs the air and causes weak local flows. Moreover, a much larger ascending flux is caused by the weight loss of the air in all the shielding cylinder; this also produces a pressure drop in the shielding cylinder (see Section 6). The error introduced by this effect in the weight measurements has been substantially reduced by enclosing the samples to be weighed in a long glass tube, closed at the bottom. The samples had the form of elongated objects (like big pencils). In order to set an upper limit on the buoyancy effect, some flat samples were weighed too, without enclosing them in the glass tube, in vertical and horizontal positions, and the results for the two cases were compared. It turned out that the weight loss in horizontal position was larger (by approx. 10% of the total loss) than in vertical position.

2. *Hydrostatic force.* This introduces a slight dependence of the weight loss on the density of the sample. For a material with density 1 Kg/dm^3, the Archimede pull amounts to about the 0.1% of the weight. Since the air density is slightly lower in the shielding cylinder (see above and Section 6), the Archimede pull is lower itself, but this effect can be disregarded, being of the order of 0.001% of the total weight or less.

3. *Diamagnetism.* It is known that molecular diamagnetism produces a small levitating force on samples placed in a magnetic field gradient. For a large class of materials, this force is essentially independent on the chemical composition of the material and is proportional to its weight. For instance, a standard value for the diamagnetic levitating force is the

following: in a field gradient of 0.17 T/cm the force exerted on a 1 g sample of $NaCl$, SiO_2, S or diamond is ca. equal to 16 *dyne* (about 0.016 g, or 1.6% of the weight).

Since the force is proportional to the square of the field gradient, one easily finds that the value of the field gradient corresponding to a percentage weight loss of 0.1% is about 0.04 T/cm (for comparison, we recall that the maximum weight loss we observed in stationary conditions was 0.5%). A mapping of the static field produced by our apparatus yelded in all cases smaller values of the field gradient near the disk, and much smaller values at a height of 50 cm or more above the disk, where the observed weight loss stays the same (compare Section 6). We thus conclude that the effect of molecular diamagnetism can be completely disregarded.

4. *RF fields.* The possibility of a slight levitating effect from an RF magnetic field cannot be excluded completely. However, such disturbance was attenuated, if not eliminated, by placing thick metal screens between the cryostat and the samples. Copper, aluminum, and steel screens were tested separately and in many different combinations. The individual screens had a diameter of 300 mm and a thickness of 50 mm. The presence of the screens never altered the effect.

5 Checks.

We did several checks in order to correlate more clearly the appearence of the effect to specific experimental conditions.

1. *Substituting a metal disk or a disk made totally from superconducting ceramic.* In all these cases, the shielding effect was not observed. This confirms, in our opinion, that the origin of the effect resides in the interaction between the upper (superconducting) part of the disk and the lower part, where considerable resistive phenomena take place.

2. *Measurements in vacuum, or in different gases, or in a fluid.* These measurements show that the effect exists in these conditions, too, and has the same magnitude as in air. For these cases, however, we cannot furnish data as precise as the measurements taken in air yet, because the experimental conditions are more difficult and the necessary statistics

are still being accumulated. Measurements in vacuum or in gases other than air (N_2, Ar) are hampered by the fact that the samples and the analytical balance must be enclosed in a sealed container. For the measurements in fluids (H_2O, C_2H_5OH) Archimede pull is more relevant and thus complicates measurements.

3. *An AC field is indispensable.* The shielding effect was completely absent when only static magnetic fields were employed.

4. *Other weighing techniques.* Although the most accurate measurements have been taken with the Dupont balance for precision differential thermogravimetric analysis, we employed for verification three other balances. In the latest runs, using heavier samples with weights varying from 100 g to 250 g, a standard analytical balance was used. Given these masses and the balance's accuracy (0.01 g), weight losses of 0.01% were easy to detect. In addition, we used two other types of balances, sketched in Fig. 8. The first one is a torsion balance, whose oscillation period depends on the tension of the wire and thus on the weight of a suspended sample. This period can be measured with high accuracy through a laser beam reflected by a mirror attached to the wire. Finally, we employed a spring balance whose movements are detected by an induction transducer.

6 Results.

The levitating disk revealed a clearly measurable shielding effect against the gravitational force even without rotation. In this situation, the weight-loss values for various samples ranged from 0.05 to 0.07%. As soon as the main solenoids were switched on and the disk began to rotate in the vapors of liquid helium, the shielding effect increased, and at 5000 rpm, the air over the cryostat began to rise slowly toward the ceiling. Particles of dust and smoke in the air made the effect clearly visible. The boundaries of the flow could be seen clearly and corresponded exactly to the shape of the toroid.

The weight of various samples decreased no matter what they were made from. Samples made from the same material and of comparable size, but with different masses, lost the same fraction of their weight. The best measurement gave a weight loss of 0.5% while the disk was spinning at 5000 rpm, with typical values ranging from 0.3 to 0.5%. Samples placed above the

inner edge of the toroid (5-7 mm from the edge) were least affected, losing only 0.1 to 0.25% of their weight. The external boundary of the shielding cylinder was quite clear (no more than 2 cm). The maximum values of weight loss were obtained when the levitation height of the disk was at its maximum value, about 30-35 mm over the magnets. This condition cannot be reached above 70 K, although the disk had become superconducting already at 94 K.

During the time when the rotation speed was being decreased from 5000 to 3500 rpm, using the solenoids as braking tools, the shielding effect reached maximum values: the weight loss of the samples was from 1.9 to 2.1%, depending on the position of the sample with respect to the outer edge of the disk. These peak values were measured during a 25-30 seconds interval, when the rotational speed was decreasing to 3300 rpm. Because of considerable disk vibration at 3000-3300 rpm, the disk had to be rapidly braked in order to avoid unbalanced rotation, and further weight measurements could not be carried out.

The samples' maximum weight loss was observed only when the magnetic field was operating at high frequencies, on the order of 3.2 to 3.8 MHz. The following tables show how the shielding effect varied in response to changes in the disk's rotation speed or the current frequency.

At constant frequency of 2 MHz:

Rotation speed (rpm)	Weight loss (%)
4000	0.17
4200	0.19
4400	0.20
4600	0.21
4800	0.22
5000	0.23

At constant rotation speed of 4300 rpm:

Frequency (MHz)	Weight loss (%)
3.1	0.22
3.2	0.23
3.3	0.24
3.4	0.26
3.5	0.29
3.6	0.32

Remarkably, the effective weight loss was the same even when the samples, together with the balance, were moved upward to a distance of 3 m, but still within the vertical projection of the toroidal disk. No weight loss at all was observed below the cryostat.

We also observed a slight diminution of the air pressure inside the shielding cylinder. The difference between the external and the internal pressure was up to 5 mm of mercury in stationary conditions (disk rotating at 4000-5000 rpm) and increased up to 8 mm of mercury during the "braking" phase. Pressures were measured through a vacuum chamber barometer. We believe that the diminution of the pressure inside the shielding cylinder is originated by the pseudo-convective motion of the air, which being lighter tends to raise. This phenomenon is favoured by the fact that an entire cylinder of air get lighter at the same time and thus the ascending motion is amplified.

7 Discussion.

The interaction of a superconducting ceramic body with the gravitational field is a complicated process and cannot be characterized by one single law or physical phenomenon. Also, a comprehensive explanation of the mechanism responsible for high-temperature superconductivity has not yet been found. Still, these facts do not make the observed phenomenon less interesting.

In our previous work [4] the weight loss of samples over the levitating superconductor was smaller, varying from 0.05 to 0.3%. At that time it was difficult to exclude entirely any influence from the radio-frequency field because the sample was separated from the disk and the magnets by a thin plastic film. Now, the superconductor is situated in a stainless steel cryostat, so this influence should be negligible (see also Section 5).

The modification of the superconductor's crystalline structure produced a composite body with a dense and highly oriented upper layer and a porous lower layer with random grain orientation. The upper layer is superconducting at the operation temperature and is able to carry high J_c current under considerable magnetic field, while the lower layer cannot conduct high currents. The boundary between the two layers is likely to constitute a "transition" region in which the supercurrents, that are completely free to move in the upper layer, begin to feel some resistance.

It is also expected that a complex interaction between the composite ceramic body and the external magnetic field takes place. This interaction depends on the coherence length, the flux pinning, the field frequency and the field force, the penetration depth, and the parameters of the crystal lattice. These characteristics are interrelated in a complex way. According to the experimental data (compare also [10], where only a static field was applied), a levitating superconductor does not reveal any unusual shielding if it has no contact with the high frequency AC magnetic field.

As analyzed in [7, 8], pinning centers with different origins may exist inside the superconducting disk, and fluxes will be trapped at some of them. Fluxes trapped at weak centers will begin to move first, while those trapped at strong centers will not move until the Lorentz force exceeds the pinning force. The overall current will be composed of the superposition of flux motions with different speeds.

There are no grounds to claim that the rotation momentum of the disk interacts with

gravitation force, but it seems that fast rotation is favorable for stabilization of the shielding effect.

Finally, it is worth noting that the experimental equipment described above has much in common with magneto-hydro-dynamic (MHD) generators.

The first attempt at a theoretical explanation of the effect has been offered by G. Modanese [11, 12]. Further investigations now in progress may help to prove, change, or complete the present understanding of the observed phenomenon.

8 Conclusions.

A levitating superconducting ceramic disk of $YBa_2Cu_3O_{7-x}$ with composite structure demonstrated a stable and clearly measurable weak shielding effect against gravitational force, but only below 70 K and under high-frequency e.m. field. The combination of a high-frequency current inside the rotating toroidal disk and an external high-frequency magnetic field, together with electronic pairing state and superconducting crystal lattice structure, apparently changed the interaction of the solid body with the gravitational field. This resulted in the ability of the superconductor to attenuate the energy of the gravitational force and yielded a weight loss in various samples of as much as 2.1%.

Samples made of metals, plastic, ceramic, wood, etc. were situated over the disk, and their weight was measured with high precision. All the samples showed the same partial loss of weight, no matter what material they were made of. Obtaining the maximum weight loss required that the samples be oriented with their flat surface parallel to the surface of the disk. The overall maximum shielding effect (2.1%) was obtained when the disk's rotational speed and the corresponding centrifugal force were slightly decreased by the magnetic field.

It was found that the shielding effect depended on the temperature, the rotation speed, the frequency and the intensity of the magnetic field. At present it seems early to discuss the mechanisms or to offer a detailed analysis of the observed phenomenon, as further investigation is necessary. The experimentally obtained shielding values may eventually prove to have fundamental importance for technological applications as well as scientific study.

8.1 Acknowledgments.

The author is grateful to the Institute for High Temperatures at the Russian Academy of Sciences for their help in preparing the unique superconducting ceramic disks and for being permitted to use their laboratory equipment. The effect was first observed and studied at Tampere University of Technology. The author would like to thank G. Modanese, F. Pavese and O. Port for advice and support.

References

[1] Riise A.B., Johansen T.H., Bratsberg H. and Yang Z.J., Appl. Phys. Lett. **60** (1992) 2294.

[2] Brand E.H., Am. J. Phys. **58** (1990) 43.

[3] Lofland S., Huang M.X. and Bhagat S.M., Physica **C 203** (1992) 271.

[4] Podkletnov E. and Nieminen R., Physica **C 203** (1992) 441.

[5] Murakami M., Morita M., Doi K., Miyamoto K. and Hamada H., Jpn. J. Appl. Phys. **28** (1989) 399.

[6] Murakami M., Morita M. and Koyama N., Jpn. J. Appl. Phys. **28** (1989) 1125.

[7] Takizawa T., Kanbara K., Morita M. and Hashimoto M., Jpn. J. Appl. Phys. **32** (1993) 774.

[8] Xu J.H., Miller J.H. Jr. and C.S. Ting, Phys. Rev. **B 51** (1995) 424.

[9] Bull M., De Podesta M., Physica **C 253** (1995) 199.

[10] Unnikrishnan, C.S., Physica **C 266** (1996) 133.

[11] Modanese G., Europhys. Lett. **35** (1996) 413.

[12] Modanese G., Phys. Rev. **D 54** (1996) 5002; Modanese G. and Schnurer J., *Possible quantum gravity effects in a charged Bose condensate under variable e.m. field*, report UTF-391/96, November 1996, Los Alamos database nr. gr-qc/9612022.

FIGURE CAPTIONS.

1. Schematic cross-section of the furnace for high-temperature treatment of the ceramic disk with planar hig-frequency inductors.
2. General magnets and cryostat setup.
3. Typical geometry and position of the disk over supporting solenoids.
4. Schematic design of rotating solenoids. a, b: various configurations.
5. Typical configuration of the tested set-up for the rotating solenoids.
6. Block scheme of the electrical connections.
7. Schematic design of the cryogenic system for the refrigeration of the superconducting disk.
8. General configuration of the equipment for the weight loss measurements.
9. Typical design of the three-point disk-braking system.

High T_c materials, fabrication |general, fig. 21/3|

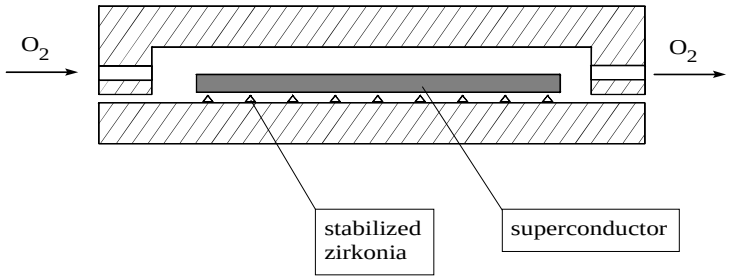

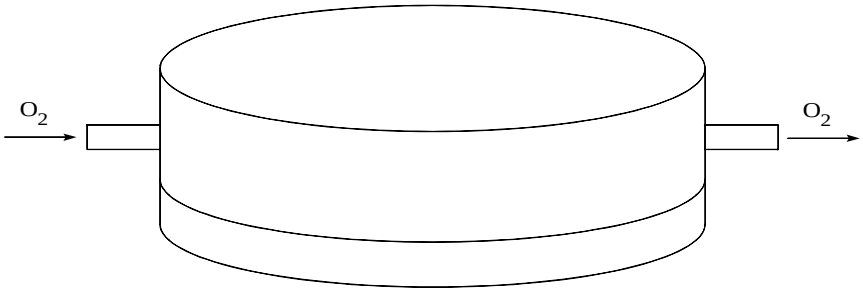

Created using Super. Tech. Top Draw 1/25/97 7:20:55 PM

Fig. 1

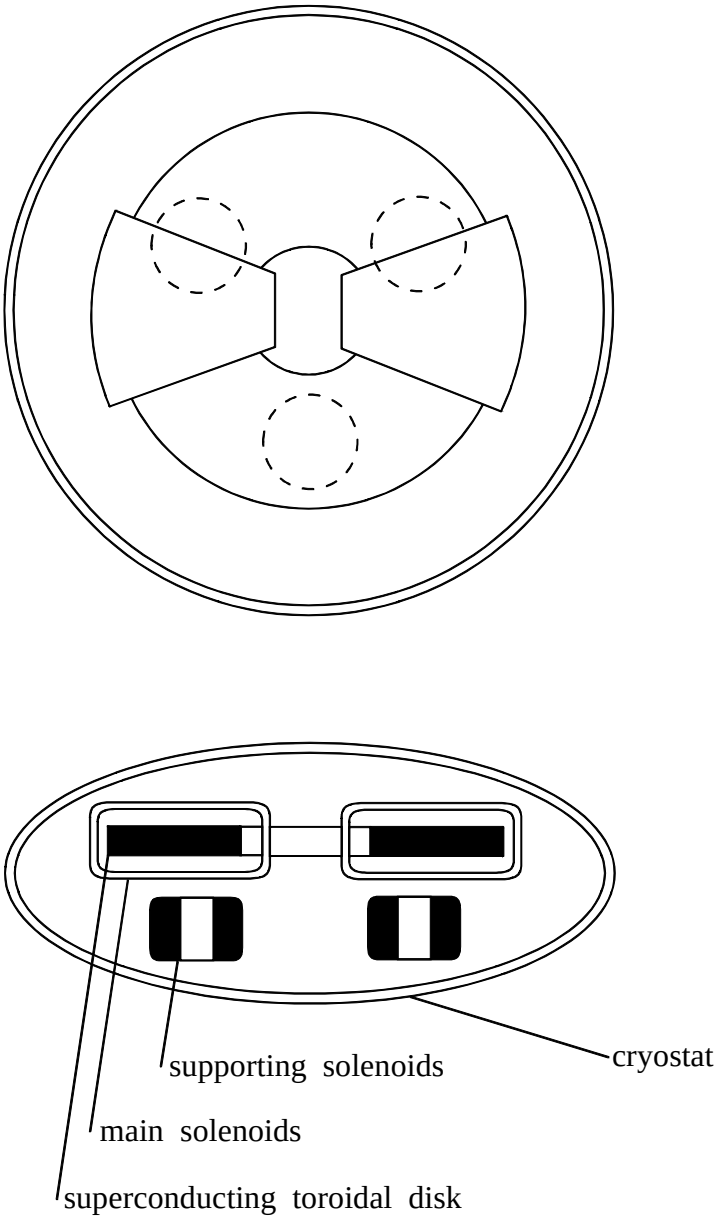

FIG.2

Created using Super. Tech. Top Draw 1/25/97 7:31:36 PM

Supporting solenoids

|general, fig. 21/5|

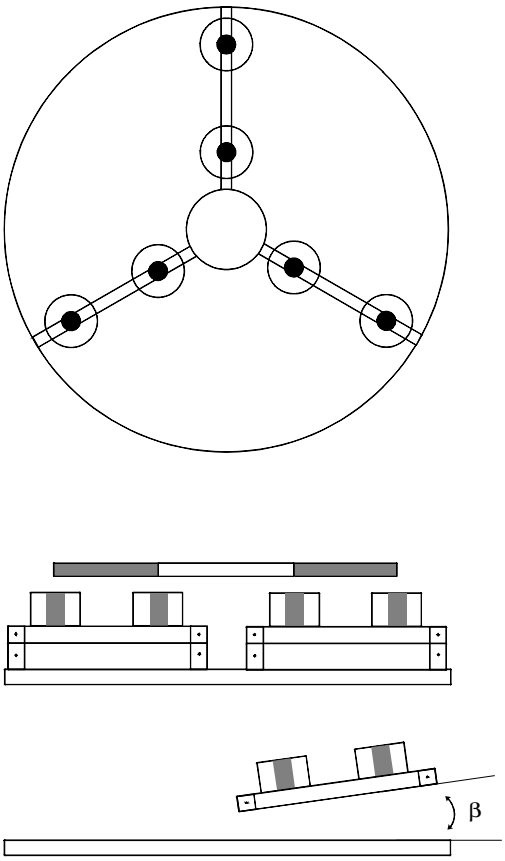

Fig. 3

Created using Super. Tech. Top Draw 1/25/97 7:33:14 PM

Rotating solenoids |general, fig. 31/3|

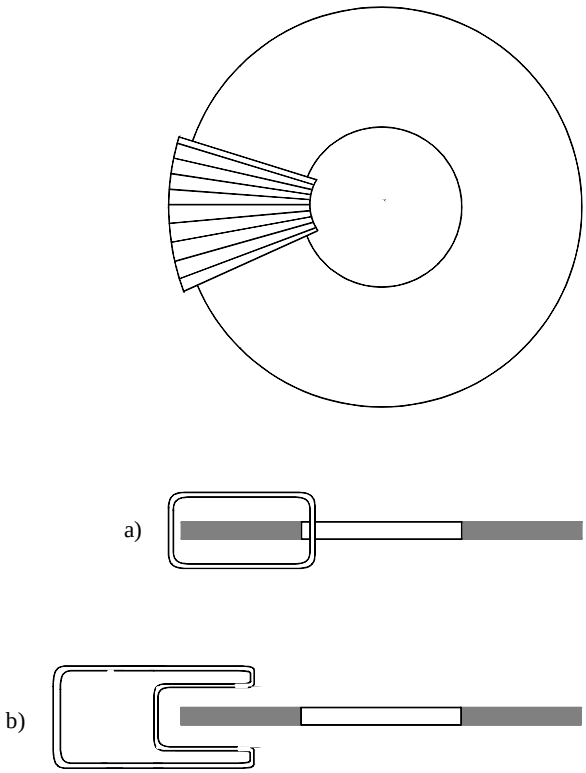

Fig. 4

Created using Super. Tech. Top Draw 1/25/97 7:34:00 PM

Rotating solenoids

|general, fig. 31/4|

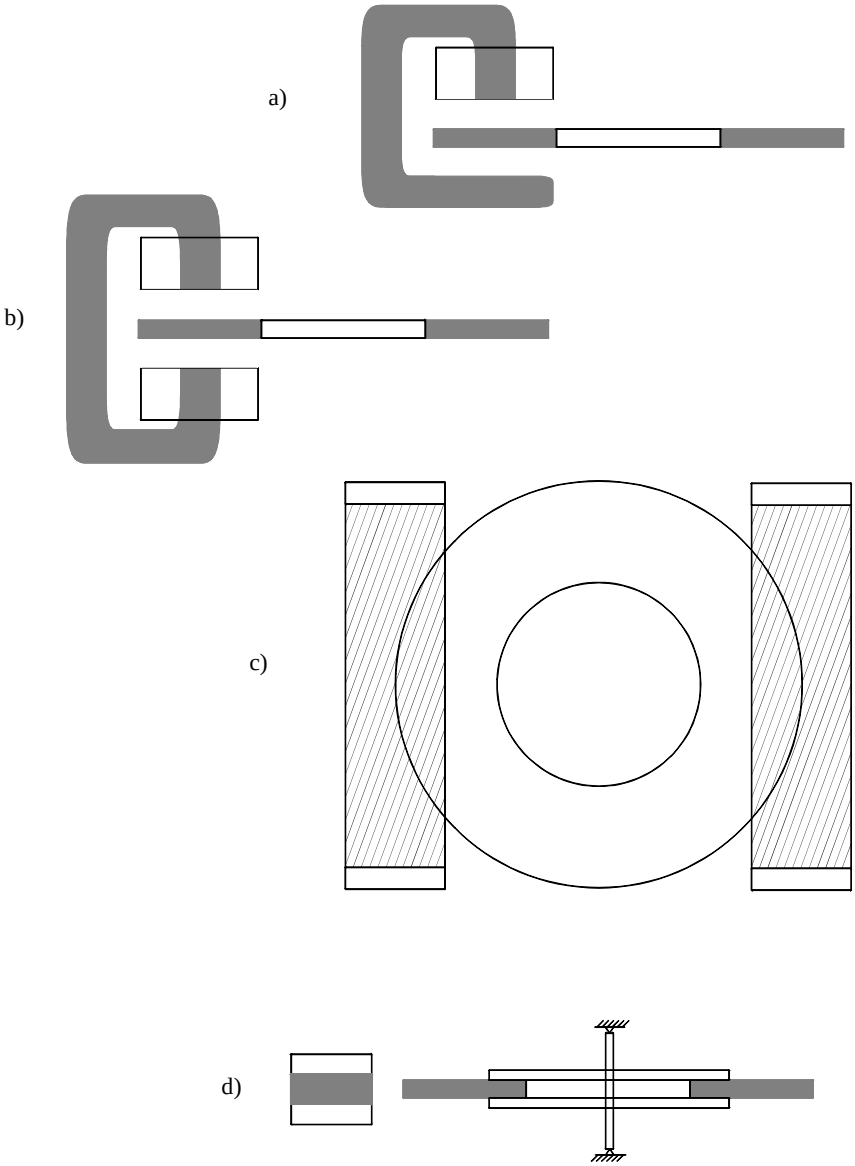

Fig. 5

Created using Super. Tech. Top Draw 1/25/97 7:34:52 PM

Electric circuits

|general, fig. 41/3|

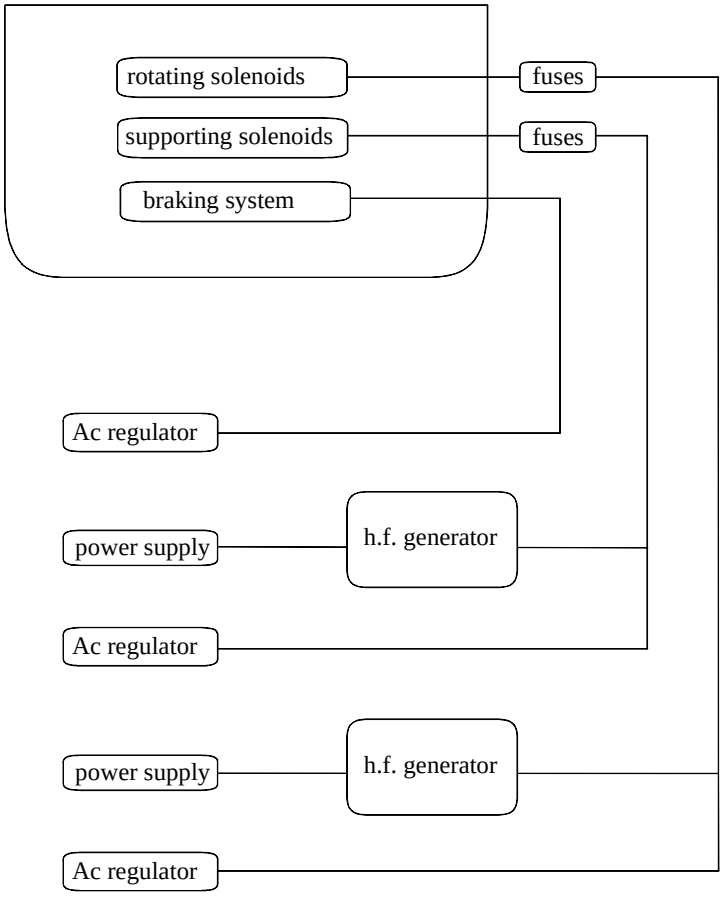

Fig. 6

Created using Super. Tech. Top Draw 1/25/97 7:35:28 PM

Cryogenic system

|general, fig. 51/5|

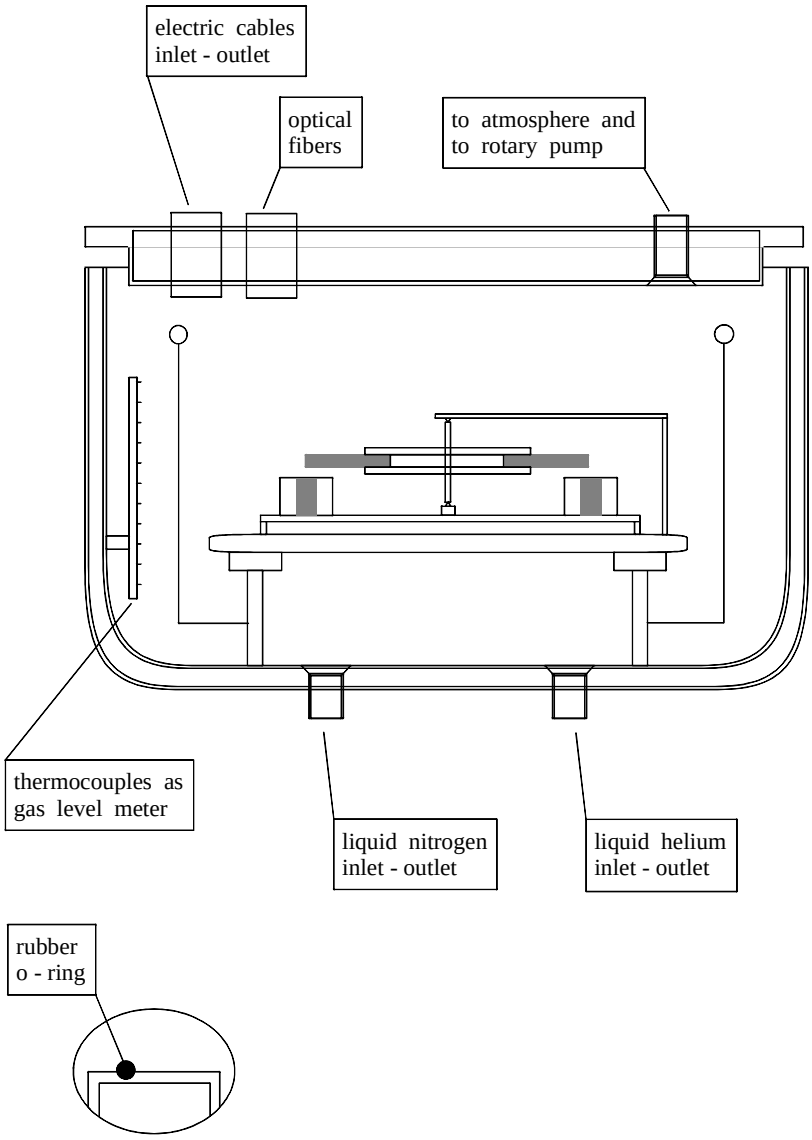

Created using Super. Tech. Top Draw 1/25/97 7:36:13 PM

Fig. 7

Weight & pressure measurements |general, fig. 61/4|

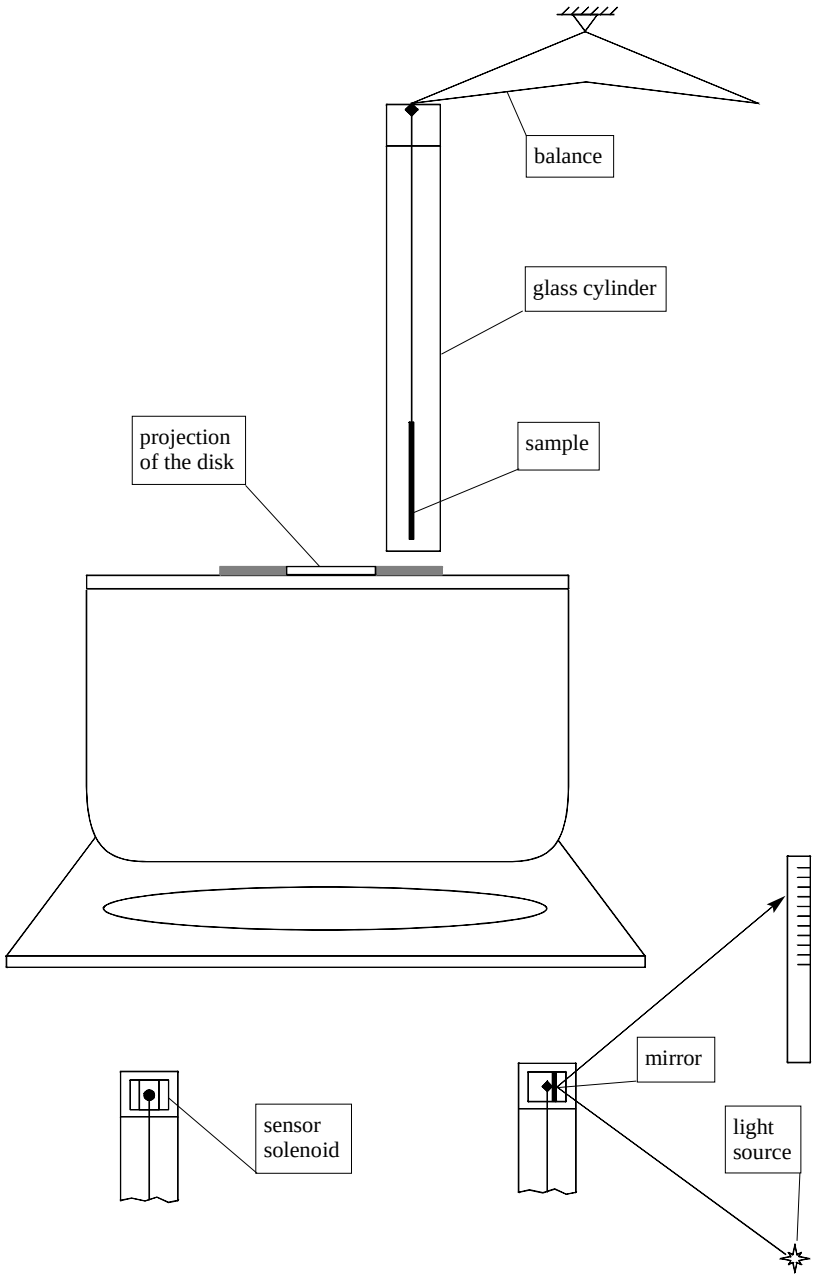

Created using Super. Tech. Top Draw 1/25/97 7:36:43 PM

Fig. 8

Disk braking system |general, fig. 71/3|

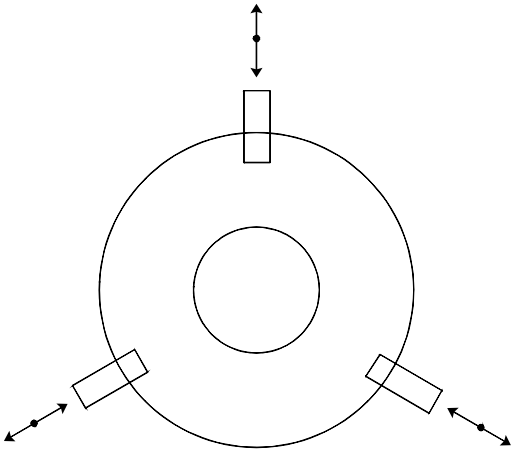

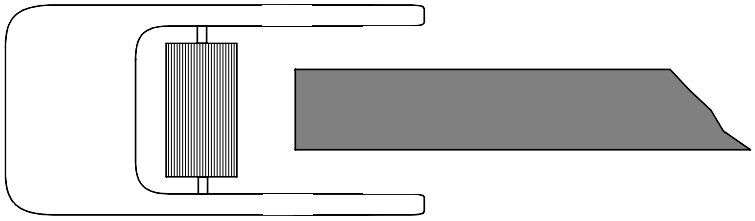

Fig. 9

Created using Super. Tech. Top Draw 1/25/97 7:37:17 PM