The century of the incomplete revolution: searching for general relativistic quantum field theory

Contribution to the Special Issue 2000 of the Journal of Mathematical Physics

Carlo Rovelli
Physics Department, University of Pittsburgh, Pittsburgh, PA 15260, USA;
Centre de Physique Théorique, Case 907, Luminy, F-13288 Marseille, France.

rovelli@pitt.edu

(July 29, 2011)

arXiv:hep-th/9910131v1 17 Oct 1999

In fundamental physics, this has been the century of quantum mechanics and general relativity. It has also been the century of the long search for a conceptual framework capable of embracing the astonishing features of the world that have been revealed by these two "first pieces of a conceptual revolution". I discuss the general requirements on the mathematics and some specific developments towards the construction of such a framework. Examples of covariant constructions of (simple) generally relativistic quantum field theories have been obtained as topological quantum field theories, in nonperturbative zero-dimensional string theory and its higher dimensional generalizations, and as *spin foam models*. A canonical construction of a general relativistic quantum field theory is provided by *loop quantum gravity*. Remarkably, all these diverse approaches have turn out to be related, suggesting an intriguing general picture of general relativistic quantum physics.

I. NEW MATHEMATICS FOR FUNDAMENTAL PHYSICS

In fundamental physics, the first part of the twentieth century has been characterized by two important steps towards a major conceptual revolution: quantum mechanics and general relativity. Each of these two theories has profoundly modified some key part of our understanding of the physical world. Quantum mechanics has changed what we mean by matter and by causality and general relativity has changed what we mean by "where" and "when". The last part of the century has then been characterized by the search for a new synthesis: a unitary and comprehensive conceptual framework, capable of replacing the Newtonian framework and embracing the astonishing features of the world that have been revealed by quantum mechanics and by general relativity. Lacking a better expression, we can loosely denote a theoretical framework capable of doing so as a "background independent theory", or, more accurately, "general relativistic quantum field theory".

The mathematics needed to construct such a theory must depart from the one employed in general relativity – differentiable manifolds and Riemannian geometry– to describe classical spacetime, as well as from the one employed in conventional quantum field theory –algebras of local field operators, Fock spaces, Gaussian measures ...– to describe quantum fields. Indeed, the first is incapable of accounting for the quantum features of spacetime; the second is incapable of dealing with the absence of a fixed background spatiotemporal structure. The new mathematics should be capable to describe the quantum aspects of the geometry of spacetime. For instance, it should be able to describe physical phenomena such as the quantum superposition of two distinct spacetime geometries, and it should provide us with a physical understanding of quantum spacetime at the Planck scale and of the "foamy" structure we strongly suspect it to have.

Here, I wish to emphasize that what we have learned in this century on the physical world –with quantum mechanics and general relativity– represents a rich body of knowledge which strongly constraints the form of the general theory we are searching. If we disregard one or the other of these constraints for too long, we just delay the confrontation with the hard problems. For example, string theory has developed to a large extent disregarding the main physical lesson of general relativity: as a result, string theorist are facing today the problem of searching a genuinely background independent formulation, thus realizing that after so many years of research the structure of the fundamental theory is still unknown.

In the first part of this essay (Section II), I give a general discussion of the main physical "lessons" we have learned from general relativity and from quantum field theory, and on the consequent constraints on the general

form of the theory we are searching. In particular, I discuss the physical meaning and the theoretical implications of diffeomorphism invariance, and I stress the fact that common concepts such as Poincaré invariance, or the hamiltonian, are weak field limit concepts that loose their physical significance when the gravitational field is strong. They are therefore unlikely to play any role in the fundamental theory.

In the second part of this essay (Section III), I illustrate some of the ideas and the lines of research aimed at developing a general relativistic quantum field theory. A well developed attempt to a rigorous construction of a general relativistic quantum field theory is *loop quantum gravity*, a hamiltonian quantization of general relativity. Loop quantum gravity has obtained remarkable physical results on the Planck scale quantum structure of space. Of particular interest is the derivation of the *discrete* spectrum of the physical area a generic surface, and the physical volume of a generic spatial region [1]. This result represents a set of detailed and in principle falsifiable quantitative physical predictions, it provides a physical interpretation for the spin network states, the basis states of the theory [2], and gives us an intuitive picture of quantum spacetime.

On the side of covariant formalisms, several examples of generally covariant quantum field theories have been constructed. Some of these are very simple theories with a finite number of degrees of freedom, such as the topological quantum field theories [3]. Of particular relevance here are combinatorial state sum constructions of topological quantum field theories in three [4] and four [5–7] dimensions. Nonperturbative string theories "in zero-dimensions", or 2d quantum gravity matrix models [8] represent another simple example in low dimension. Matrix models have been generalized to three and four dimensions, by Boulatov [9] and by Ooguri [6] in the form of 3d and 4d topological quantum field theories. There are several tentative formulations of quantum GR itself as a model of this kind [11–14], some of which are based on the fact that GR can be seen as a constrained form of BF theory, a topological field theory. All these theories can be represented as *spin foam models*: Feynman sums over 2-complexes (branched surfaces) carrying spins [10]. Thus, spin foam models seem to represent a generic covariant formalism for general relativistic quantum field theory.

Remarkably, canonical and covariant approaches are related. A spacetime manifestly covariant formulation of loop quantum gravity can be obtained by expanding the operator that evolves the quantum states in the coordinate time, à la Feynman. This yields precisely a spin foam model. The spin foam represents in this case the history of the evolution of a spin network. Thus, a surprising number of very different approaches converge towards a somewhat unitary description of a general relativistic quantum field theory. In this formulation, a spin foam provides an intuitive picture of the foamy features of the quantum spacetime geometry.

Here, I present only a brief view of some intriguing developments and their connections. For a more comprehensive overview of current approaches to quantum gravity, see [15]. My main aim is to show that there is a field of converging ideas on the problem of constructing general relativistic quantum field theory. Hopefully, these idea will lead us to a well defined nontrivial theory whose classical limit is general relativity; and thus to the conclusion of the beautiful conceptual revolution opened at the beginning of the century by quantum mechanics and general relativity.

II. WHY A GENERAL RELATIVISTIC QUANTUM FIELD THEORY

A. The lesson of general relativity: diffeomorphism invariance

General relativity (GR) is the present theory of the gravitational interaction. It is a highly successful theory, which in recent years has obtained spectacular empirical support –binary pulsar's period decay due to gravitational radiation, discovery of black holes in the sky, ...–, has pervaded several branches of physics –astrophysics, cosmology, ...–, and has even found technological application –in the global positioning system–, a development unthinkable not long ago.

However, GR is much more than just the theory of a specific physical force. Indeed, GR is a theory of space and time. It has modified in depth our understanding of what space and time are, radically changing the Newtonian picture. This modification of the basic physical picture of the world does not refer to the gravitational interaction alone. Rather, it affects *any* physical theory. Indeed, GR has taught us that the action of *all* physical systems must be generally covariant, not just the action of the gravitational field. Thus, GR is a theory with a universal reach, whose implications involve the redefinition of our description of the whole of fundamental physics.

More in detail, GR has modified the physical meaning of the spacetime coordinates x^μ that enter our basic description of the world (as argument of the fields, or position of fundamental physical objects such as particles, strings,

branes ...). In Newtonian and special relativistic physics, the coordinates x^μ describe the spacetime localization of the events. Events are thought to happen "in" spacetime. Intuitively, spacetime can be thought as a stage over which physics happens. Concretely, the localization of an event is determined with respect to a physical reference system, namely a set of physical objects chosen as spatiotemporal reference. For instance, the value in $\vec{x} = 0$ and $t = 0$ of the electric field $\vec{E}(\vec{x}, t)$ represents a physical quantity that can be measured in a certain spacetime location determined by a physical reference system.

If we take GR into account, this picture does not hold anymore, and the meaning of the coordinates x^μ is altered. In fact, in a general relativistic theory physical quantities that have a coordinate dependence are not gauge-invariant. Only quantities that *do not* depend on the coordinates may correspond to concretely physically observable quantities. Localization with respect to a background spacetime, or with respect to a fixed external reference system, has no meaning. What has physical meaning is only the *relative* localization of the dynamical objects of the theory (the gravitational field among them) with respect to one another. The physical picture of the world provided by GR is not that of physical objects and fields over a spatiotemporal stage. Rather, it is a more subtle picture of interacting entities (fields and particles) for which spatiotemporal coincidences only, and not spacetime localization, have physical significance. Once again, this modification of the meaning of the coordinates does not refer to the gravitational force alone: it refers to our entire description of the world at the fundamental level.

At the classical (non quantum) level, this novel view of space and time is expressed by the use of physical theories which are still defined over a "spacetime" differential manifold $\mathcal{M}$, but which are invariant under (active) diffeomorphisms $\phi : \mathcal{M} \to \mathcal{M}$ of the spacetime manifold $\mathcal{M}$ into itself. The maps ϕ form a group, denoted $Diff_\mathcal{M}$. More in detail, one first defines the fields φ of the theory as if they were located over spacetime. That is, as functions over the manifold $\varphi : \mathcal{M} \to F$, where F is some field-value space. Similarly, the dynamics of a particle is described by the worldline $X : R \to \mathcal{M}$ of the particle in $\mathcal{M}$. Then, however, one chooses a diffeomorphism invariant action functional

$$S[\varphi, X_n] = S[\phi(\varphi), \phi(X_n)], \qquad \forall\ \phi \in Diff_\mathcal{M}, \tag{1}$$

where φ represents all the fields and $X_n,\ n = 1 \dots N$ represents N particles's worldlines. In (1), $Diff_\mathcal{M}$ acts geometrically on the space of the fields and of the particle trajectories. (It acts on the dynamical variables of the theory only, not on fixed nondynamical structures.). For instance, if φ is a scalar field, $\phi(\varphi) = \varphi \circ \phi$, and, for the particle worldline, $\phi(X_n) = \phi \circ X_n$.

One of the main results of twentieth century's fundamental physics is that at the fundamental level the physical world is described by theories with property (1).

Property (1) implies that spacetime localization is relational, for the following reason. If (φ, X_n) is a solution of the equations of motion, then so is $(\phi(\varphi), \phi(X_n))$. But ϕ might be the identity for all coordinate times t before a given t_0 and differ from the identity for some $t > t_0$. The value of a field at a given point in $\mathcal{M}$, or the position of a particle in $\mathcal{M}$, change under the active diffeomorphism ϕ. If they were observable, determinism would be lost, because equal initial data could evolve in physically distinguishable ways respecting the equations of motion. Therefore classical determinism forces us to interpret the invariance under $Diff_\mathcal{M}$ as a gauge invariance: we must assume that diffeomorphic configurations are physically indistinguishable. That is

$$(\varphi, X_n) \sim (\phi(\varphi), \phi(X_n)), \tag{2}$$

where $\sim$ means physically indistinguishable. A (classical) physical gauge invariant state of the system s is not described by a field configuration (or by the location of the particles), but rather by the equivalence class of field configurations (and particle locations), related by diffeomorphisms.

The quantities that have physical meaning, namely that can be predicted by the theory once the state is known, or whose measurement gives information on the state of the system, are diff-invariant quantities, that is, functions Q of the dynamical variables φ and X that satisfy

$$Q[\varphi, X_n] = Q[\phi(\varphi), \phi(X_n)], \qquad \forall\ \phi\ \in\ Diff_\mathcal{M}. \tag{3}$$

These quantities are the "observables" of a general relativistic theory. They do not have a dependence on the coordinates x^μ, and they are not functions on $\mathcal{M}$. Indeed, anything which depends on the coordinates x^μ or is a functions on $\mathcal{M}$ is gauge-noninvariant, and therefore does not represent a physical quantity. Examples of diff-invariant quantities satisfying (3) are the Earth-Venus distance during the last solar eclipses, the number of pulses of a pulsar in a binary system that reach the Earth during one revolution of the system (that is, between two Doppler maxima),

the energy deposited on a gravitational antenna by a gravitational wave pulse and, in fact, any significative physical quantity measured in general relativistic experimental or observational physics. For a more detailed discussion on observability in GR, see [16–18].

I will say that an observable quantity in a field theory is "weakly local" if it is localized on the manifold, that is, if it depends on the coordinates. I will say that it is "weakly nonlocal" is it doesn't. The adjective "weak" is to distinguish this notion of locality from others employed in physics, such us spacelike commutativity of the quantum fields or absence of nonlocal interactions. Observables in a general relativistic theory are weakly nonlocal. On the other hand, general relativistic observables are typically "local" in a weaker, relational, sense: for instance, the value of the Ricci scalar in the spacetime point in which two particles' worldlines intersect is local in the sense that it is localized in terms of physical degrees of freedom, the particles. I will say that observables of this type are "relationally local". Typical GR observables are thus relationally local and weakly nonlocal.

In a general relativistic context, the spacetime manifold $\mathcal{M}$, whose points are labeled by the coordinates x^μ, is thus nothing more than an auxiliary mathematical device for describing spatiotemporal relations between dynamical objects. These relations are given by spatiotemporal coincidence, not by localization with respect to spacetime, or with respect to external reference system objects. A displacement, or an arbitrary smooth deformation of all dynamical objects over the manifold $\mathcal{M}$ is a change of mathematical description, not a change of physical state. Coordinate dependent quantities have no operational meaning. Only quantities that do not depend on the coordinates have physical meaning. Localization over $\mathcal{M}$ has no physical meaning. Only localization of the dynamical objects with respect to one other has physical meaning. This is a deep change in the way physics treats localization. As we shall see below, the effects of this change on quantum field theory are considerable.

I conclude this section by briefly discussing a few important theoretical notions whose meaning has to be slightly generalized in order to make sense in a general relativistic context. In particular, I will mention the phase space, the observable algebra and time.

The phase space Γ is commonly defined as the space of the initial data at some initial time, up to gauge invariance, if any. In general, however, Γ admits a more covariant definition, as the space of the solutions of the equations of motion, up to gauge. This definition makes sense in the general relativistic context. Let $\mathcal{C}$ be the space of the solutions of the equations of motion of a diff invariant theory. $Diff_{\mathcal{M}}$ acts on $\mathcal{C}$. The phase space of the theory is

$$\Gamma = \frac{\mathcal{C}}{Diff_{\mathcal{M}}}. \tag{4}$$

Γ carries a natural simplectic structure, determined by the action. Concretely, this simplectic structure can be computed using the conventional hamiltonian framework.[1] However, it can also be directly computed in a covariant fashion.

The physical observables of the theory, such as the examples mentioned above, satisfy eq.(3), or eq.(5), and are thus real functions on Γ. An observable, indeed, has a well defined value on every physical state s.[2] In general, the space of the smooth[3] functions on a phase space Γ, equipped with the Poisson brackets determined by Γ's simplectic structure, is a noncommutative algebra $\mathcal{A}_{cl}$, the classical observables Poisson algebra. A physical state determines (and can be identified with) a positive functional on the observable algebra

---

[1] In the hamiltonian framework, a solution of the equations of motion is coordinatized by its value on a (physically fictitious) "initial value ADM hypersurface", and the quotient (4) is obtained by factoring away the gauge transformations generated by the Dirac, or ADM constraints C^μ. In this formalism, (3) becomes

$$\{Q, C^\mu\} = 0. \tag{5}$$

An observable is a quantity having vanishing Poisson brackets with the ADM constraints.

[2] Actually, observables of physical interest are often defined on *portions* of Γ only, that is, only for certain classes of physical states.

[3] In general, Γ fails to be a manifold, due in particular to the different dimensionality of the orbits of $Diff_{\mathcal{M}}$ in $\mathcal{C}$, and care must be accordingly taken in defining smoothness. From the physical point of view, what matters are the not points of Γ, but open sets in Γ, because physical measurements have errors and the state is never exactly known. Thus, in principle we can disregard the singular points of Γ without changing physical predictions. In practice these singular points –spaces with symmetries– are often the only ones in which we are able to compute something!

$$s(q) = q(s), \qquad s \in \Gamma, q \in \mathcal{A}_{cl}. \tag{6}$$

That is, a state can be viewed as an ensemble of values that the observables can take. We can thus take the algebra of the observables $\mathcal{A}_{cl}$ and its positive functionals as the fundamental elements that define the theory.

In a non general relativistic theory, the dynamics is given by assigning the hamiltonian or the action of of the Poincaré group, on Γ. In a general relativistic theory there is, in general, no hamiltonian defined on Γ. Coordinate time evolution is a gauge, and is washed away by (3). The algebra of the diffeomorphism invariant observables $\mathcal{A}_{cl}$ codes the full dynamical content of the theory. Of course, $\mathcal{A}_{cl}$ is highly non-trivial. Evolution in clock time is described by the diff-invariant (and thus coordinate-time independent) correlations between a physical variable q and a clock variable t. For each real t, $q(t)$ is a diff invariant function on Γ (See [16,19]).

On the other hand, the physical "flowing" of time is not described by the theory. In my opinion, such a flow is thermodynamical in origin and is state dependent; this "thermal time" can be identified as the state dependent flow defined by the (generic) statistical state s over the observables algebra

$$\frac{dq}{dt} = -\{q, \log s\}. \tag{7}$$

In words, it is not the hamiltonian H that defines a thermal Gibbs state $s = \exp\{-\beta H\}$, but rather the other way around: the statistical state s in which the system happens to be determines a "hamiltonian" $H \sim -\log s$, and therefore a time flow. This point of view allows one to develop a statistical mechanics of the gravitational degrees of freedom, a problem which is still open. The idea is discussed and developed in [20,21].

B. The lesson of quantum mechanics and quantum field theory: weakly local operator algebras

I begin this section with some general considerations on quantum mechanics (QM). This century has replaced Newtonian mechanics with QM as the fundamental mechanical theory. QM is a curious theory, which we probably haven't fully understood yet. The meaning of quantum mechanics is completely clear as far as the theory is applied to describe a quantum systems S interacting with a "classical" or "macroscopic" systems O, the "measuring apparatus", or "observing system". On the other hand, the physical meaning of quantum mechanics as a general mechanical theory of *all* dynamical systems is viewed by many as controversial.

I myself understand quantum mechanics as a theory that describes the interaction between *any two* physical systems. Given two systems, S and O, the way S affects O in the course of an interaction is described by the quantum theory of S, where O is formally regarded as the classical measuring device, *whatever its physical properties*. This implies that the properties that S manifests in interacting with O are not necessarily the same it manifests in interacting with another physical system, say O'. The last, in fact, may be affected by the quantum properties of O and in particular by the $O - S$ quantum correlations. These do not affect the way S interacts with O alone and are not taken into account in the quantum theory of S alone. It follows that all (contingent) properties of a system are relative to another system. There are no absolute properties, or an absolute state, of a system. A statement such as "the z component of the spin of the electron S is up" should be interpreted as "the z component of the spin of the electron S, *with respect to the physical system* O, is up" I have elaborated relational this point of view on quantum mechanics in [22], to which I refer for more details and related references.

It has been suggested by some that this issue –the interpretation of quantum mechanics– must be solved together with the problem of combing QM and GR. I do not think that this is the case. In fact, QM is uncontroversial as long as a macroscopic classical physical system O, which could be used as measuring apparatus or observing system, is available. And a system of this sort is certainly available (say, the Earth). GR forbids us from using external physical reference systems, but the external reference system that serves to localize objects should not be confused with the apparatus that performs a quantum measurement. A measuring apparatus can perform a quantum measurement of a diffeomorphism invariant quantity.

On the other hand, it seems to me that there could be some deep connection between the relational aspect of the world revealed by GR (localization is relative to other dynamical objects) and the relational aspects that, I think, characterize QM (states and outcome of measurements are relative to the observing, or interacting, object). After all, an observing object is somewhere in spacetime and, as we know from special relativity, any interaction requires spatiotemporal coincidence. The other way around, spatiotemporal coincidence can only be revealed by means of a

physical, and thus quantum, interaction. Therefore the weaving itself of spacetime seems to be woven with a thread of quantum interactions. However, I think we are still too far from a theory capable of describing the world so intimately. I think that it is more productive, today, to remain grounded on what we know well about the world, that is GR and QM, and simply search for a general relativistic quantum theory. Let me thus close this parentheses of general considerations, and get back to what we have learned from QM.

The main lesson of quantum mechanics is that the states of a physical system have a (projective) complex linear structure, such that, given any set of states s_i, in which the measurement of a quantity Q yields the results q_i, there exist also states $s = \sum_i \alpha_i s_i$, with $\sum_i |\alpha_i|^2 = 1$, in which the quantity Q can take any value q_i, each with probability $|\alpha_i|^2$. The linear space H of the states has a Hilbert structure and, for every observable quantity Q, there is an orthonormal basis s_n in which Q is determined and has value q_n. Thus, for any Q a self-adjoint operator $\hat{Q}$ on H is defined by $\hat{Q}s_n = q_n s_n$. Since distinct observables in general do not share eigenbases, the operators do not commute. In general, the set of the observables that characterize a system forms a noncommutative operator algebra $\mathcal{A}$, the quantum observable algebra, and H provides a representation of $\mathcal{A}$. The algebra $\mathcal{A}$ is related to the algebra $\mathcal{A}_{cl}$ of the classical theory that describes the $\hbar \to 0$ limit. In particular, $\mathcal{A}$ is a linear representation of (possibly a subalgebra of) $\mathcal{A}_{cl}$, or of a deformation (in $\hbar$) of the same. Thus Poisson brackets are remnants of quantum noncommutativity.

This is the general form of a quantum mechanical system. In the course of the century, however, it has become increasingly clear that nature can be described in terms of fields at the fundamental level. All the forces we know, as well as the special relativistic quantum behavior of the elementary particles are well described by field theories. The present picture of nature, which is extraordinary empirically successful, is thus a theory of fields. The observable quantities of a non general relativistic field theory are weakly local: they are values of fields and local functions of these. They depend on the value of the fields at a point (or Fourier transforms of the same), or in an open region of spacetime $\omega \subset \mathcal{M}$. A non general relativistic quantum theory of fields is a representation of an algebra $\mathcal{A}$ of spacetime dependent observables, or a *weakly local operator algebra*. The set of the observables with support on a region ω form a subalgebra $\mathcal{A}_\omega$ and

$$\omega \subset \omega' \implies \mathcal{A}_\omega \subset \mathcal{A}_{\omega'}, \qquad \forall\ \omega, \omega' \subset \mathcal{M}, \ \ \mathcal{A}_\omega, \mathcal{A}_{\omega'} \subset \mathcal{A}, \tag{8}$$

as subalgebras. In particular, $\mathcal{A}$, with suitable properties, may be an algebra of the quantum field operators [23]. We denote a theory having this structure a *weakly local quantum field theory*.

The quantum field theories that have proven so enormously successful in particle physics are weakly local quantum field theories. Examples of observable in these theories are Whightman functions, scattering amplitudes, or the energy in a spatial region. These quantities are defined on the spacetime manifold. Physically, they describe a system which is *located* somewhere in spacetime, and which is studied by means of an external reference system that determines "where" and "when" measurements are performed. The spacetime, or momentum, dependence of the quantum fields represents the spatiotemporal location of the field excitation. More precisely, the spacetime dependence of the observables represents the spatiotemporal location of the apparata that reveal these field excitations.

String theory is a weakly local field theory of this type as well. The physical interpretation of the scalar fields $X^\mu(\sigma, \tau)$ defined on the two-dimensional string world sheet is the *location* of the string on the spacetime manifold, the target space. Thus, in order to interpret the theory, we must assume that physical reference systems exist in the target space. The theory describes the motion of the string with respect to these objects. The target space equipped with its fixed metric is a pre-general relativistic "absolute" spacetime.[4]

In conclusion, a quantum theory is defined by an operator algebra $\mathcal{A}$. In a non general relativistic quantum *field* theory, $\mathcal{A}$ is a weakly local operator algebra. Observables and states have a well defined spacetime dependence, which represents the spatiotemporal localization of the field excitations and of the measurement apparata.

[4]Clearly, the fact that the quantities $X^\mu(\sigma, \tau)$ are quantum operators does not mean that "spacetime is quantized", anymore than the fact that the position of a conventional particle in Minkowski space $X^\mu(\tau)$ is an operator does.

C. General relativistic quantum field theory

We can now compare the two previous sections. As discussed in II A, if we take relativistic gravity and GR into account, we have to weaken the notion of localization. The observable quantities of a general relativistic theory are weakly nonlocal. Therefore they cannot form a weakly local operator algebra of the kind (8). Thus, the mathematical structure of quantum field theory recalled in the previous section is incompatible with the general relativistic notion of localization described in Section II A.

A general relativistic quantum theory is a quantum field theory in which the observable algebra $\mathcal{A}$ and the states have no remnant of localization in spacetime. Such a structure is very different from that of non general relativistic quantum field theory. A quantum state, in particular, will not represent a field excitation "somewhere" in space. Localization has to be defined internally, with respect to the quantum states themselves.

The theory should then reduce to a conventional weakly local quantum field theory in the limit in which we disregard the quantum and dynamical properties of the gravitational field. In this limit, relational localization with respect to the gravitational field is reinterpreted as absolute localization, defined with respect to a fixed nondynamical spacetime. In simpler words, if we do not consider the gravitational field as a dynamical entity, then we can use *it* as the background "stage" over which, and with respect to which, the other fields and the particles are localized, and move.

Is conventional QM sufficiently general to deal with diffeomorphism invariance and with relational locality? The answer is subtle, and depends on what one precisely means by conventional QM. In the Schrödinger picture, the states $\psi(t)$ depend on time, and time evolution is governed by the Schrödinger equation. This structure is not general enough to deal with general relativistic theories, in which there is no external time-parameter evolution. Indeed, an external clock is precisely a minimal form of external reference system. However, QM can be formulated in the Heisenberg picture as well. In the Heisenberg picture, a quantum state ψ has no temporal connotations. A Heisenberg state is often viewed as the value of the Schrödinger state at some fixed moment of time, but a more useful view of a Heisenberg state is to see it as representing the entire "history" of the system (at least, until the next measurement). Thus, a Heisenberg state is the quantum analog of the classical state s defined in section II A as a solutions of the equations of motion up to gauge, without any reference to time. In the Heisenberg picture of a non-general relativistic theory, observables have a time dependence, governed by a hamiltonian $\hat{H}$

$$\frac{d\hat{Q}}{dt} = i\hbar[\hat{Q}, \hat{H}]. \tag{9}$$

In a general relativistic theory there is no hamiltonian. Observables, however, must be diff-invariant, namely satisfy the quantum equivalent of equation (3). In the hamiltonian framework, this means that the observable must satisfy the quantum version of (5), that is

$$[\hat{Q}, \hat{C}^\mu] = 0, \tag{10}$$

where $\hat{C}^\mu$ are the quantum constraints. Equation (10) is the general relativistic generalization of equation (9).[5] Thus, QM admits a formulation which is sufficiently general to deal with general relativistic systems. This is a Heisenberg formulation, in which the Heisenberg equation of motion (9) is replaced by the constraint equation (10). Clock time evolution is described in this context by appropriate diffeomorphism invariant operators that express the correlation between a physical variable and the clock time [19]. These are denoted "evolving constant of the motion". An alternative explicitly covariant generalization of QM that can deal with general relativistic systems is Hartle's generalized QM [24]. See also [25].

As mentioned at the end of Section II A, in the classical theory the physical "flow" of time is presumably of thermodynamical origin. Remarkably, there is an intriguing quantum field theoretical analog of (7), given by a key structural property of von Neumann algebras, the Tomita-Takesaki theorem [26]. As shown in [21], the state dependent

[5] Any hamiltonian theory admits a formulation in this more general framework. For instance, the mechanics of a free particle in one dimension can be formulated over the four dimensional phase space (X, P_X, T, P_T) with the single constraint $C = P_T + \frac{P^2}{2m}$, and no hamiltonian. It is easy to see in this case that (10) reduces precisely to (9).

thermal time flow can be identified with the one-parameter group of automorphisms of the observable algebra given by the Tomita flow of a generic state. A state independent characterization of the time flow is then provided by the co-cycle Radon-Nikodym theorem [27], which defines a *canonical* one-parameter group of outer automorphisms of the algebra.

The problem of merging GR and QM, and concluding a century long scientific revolution is the problem of constructing a nontrivial *weakly nonlocal* quantum field theory, in which locality is only relationally defined. To define such a theory, we need a Hilbert space of states $\mathcal{H}$ and an operator algebra of observables $\mathcal{A}$ on $\mathcal{H}$ that do not carry spatiotemporal dependence, but, instead, represent diffeomorphism invariant physical states and observables. In the rest of this essay, I briefly illustrate several concrete attempts to construct theories of this type.

III. TOWARDS GENERAL RELATIVISTIC QUANTUM FIELD THEORY

Two main avenues towards the construction of a rigorous four dimensional general relativistic quantum field theory are being explored: the canonical and the covariant one. I discuss the canonical approach in Section III B and some covariant approaches in Section III C, below. I then discuss the convergence of the two approaches. Before going into this, however, in Section III A I briefly recall the old explorations of the canonical and covariant approaches developed during the the sixties and the seventies. These explorations were very "formal": badly ill-defined mathematical symbols appear in the equations, and any attempt to a nontrivial calculation yields uncontrolled infinities. In spite of this, the explorations of the sixties and seventies have played an important role in opening the way towards general relativistic quantum field theory, because they suggested the general structure the theory should have, and built the physical intuition on general relativistic quantum physics. In a sense, many of the later developments can be seen as efforts to transform these early constructions into rigorous mathematics.

A. Old ideas and intuitive constructions

The canonical framework has been introduced by Brice DeWitt and John Wheeler [28]. It is synthesized in their celebrated equations, which, in the absence of matter, read

$$\hat{H}\ \Psi[q] = \left[(q^{ac}q^{bd} - \tfrac{1}{2}q^{ab}q^{cd})\ \frac{\delta}{\delta q_{ab}}\frac{\delta}{\delta q_{cd}} - \det q\ R[q] \right] \Psi[q] = 0; \tag{11}$$

$$\Psi[q] = \Psi[\phi(q)], \qquad \phi \in Diff_\Sigma\ . \tag{12}$$

Here q is the 3d metric of a spatial hypersurface Σ, $a, b \ldots = 1, 2, 3$ are tangent space indices, R is the Ricci scalar, and the quantum state of the gravitational field is represented by the wave functional $\Psi[q]$. Equation (12) requires $\Psi[q]$ to be invariant under diffeomorphisms of Σ, while the first, the actual Wheeler-DeWitt equation, a system of infinite (because $\hat{H}$ is a function on 3-space) coupled functional differential equations, is obtained as the Dirac quantization of the constraint that generates coordinate time translations in classical hamiltonian general relativity. The two equations (11,12) can be seen as an implementation of 4d diff-invariance.

The interpretation of $|\Psi[q]|^2$ as a probability density for a measurement of the spatial geometry to yield the result q is unfortunately common in the literature, but is wrong, because only 4d diff invariant quantities are observable. To extract physical information from the Wheeler DeWitt theory, one needs a 4d diff invariant observable $Q[q, p]$ written in terms of q and its conjugate momentum p, and a corresponding quantum operator $\hat{Q} = Q[q, \frac{\delta}{\delta q}]$, commuting with the Wheeler DeWitt operator $\hat{H}$. Then the expectation value of Q in a state Ψ that solves (11,12) is given by $\langle\Psi|\hat{Q}|\Psi\rangle$, where $\langle\ |\ \rangle$ is a scalar product on the space of the solutions of (11) determined by the requirement that the operators corresponding to real observables be self-adjoint.

Formal solutions of (11) can be obtained by using a covariant formalism based on Hawking's euclidean sum over Riemannian geometries [29]

$$Z = \int [Dg]\ e^{-S[g]}\ . \tag{13}$$

g is a Riemannian metric of a 4d compact manifold $\mathcal{M}$ and $S[g]$ is the euclidean Einstein-Hilbert action. The restriction of the above integration to the 4-metrics on a 4d manifold $\mathcal{M}$ bounded by a compact 3d manifold Σ with induced metric q, gives the celebrated Hartle-Hawking's solution of (11) [30]:

$$\Psi[q] = \int_{\partial g = q} [Dg]\ e^{-S[g]}. \tag{14}$$

One can can consider a 4d cylinder $\mathcal{M} = \Sigma \times [0,1]$ and integrate over the 4-metrics on $\mathcal{M}$ that induce the two 3-metrics q', q on the two components of its boundary. The quantity

$$P_\Sigma(q', q) = \int_{\partial g = q' \cup q} [Dg]\ e^{-S[g]} \tag{15}$$

is formally a projector on the solutions of (11,12). It can also be seen as a "propagator", from the initial to the final Σ. It is a propagator, however, that acts as the identity on physical states: not surprisingly, since evolution over the "spacetime" manifold $\mathcal{M}$, or coordinate time evolution, is actually pure gauge.

As already mentioned, both the canonical theory (11) and the covariant theory (13) are ill defined and little can be computed with them. But a number of well defined constructions have been inspired by these theories.

B. Canonical approach: loop quantum gravity

> *"I feel that there will always be something missing from other methods which we can only get by working from a hamiltonian (or maybe from some generalization of the concept of hamiltonian)"*
>
> P.A.M. Dirac

Loop quantum gravity is a well developed attempt to define a general relativistic quantum field theory using canonical methods. It is a canonical quantization of general relativity, with its conventional matter couplings. The theory is based on the idea of using loop variables for describing the gravitational field. Loop variables have long been suspected to play a key role in gauge theories and gravity [31]. The discovery of the loop representation is that the use of these variables turns out to greatly simplify the treatment of diff invariance and of the dynamics in quantum gravity. In turn, the theory suggests that one-dimensional excitations (more precisely, excitations dual to surfaces in 3d) are natural diff invariant quantum excitations of the gravitational field.

I sketch here the basics of the formalism, focusing on its main structure and leaving out many important details. For a general overview of loop quantum gravity and complete references, see [32]. For a pedagogical introduction, see [33]. Let $\mathcal{A} = \{A\}$ be the space of the smooth $SU(2)$ connections on a fixed compact 3d manifold Σ. The space $\mathcal{A}$ can be taken as the configuration space for GR; see for instance [34–36]. The momentum conjugate to A is an $su(2)$ valued 2-form E, which is physically interpreted as the densitized triad [6], where $(detq)q^{ab} = Tr[E^a E^b]$. Continuous functionals $\Psi(A)$ form a topological vector space L. Let $U[A,\gamma]$ be the holonomy of the connection A along the curve γ. Let a graph $\Gamma = \{\gamma_1, \ldots, \gamma_n\}$ be a finite collection of n piecewise smooth curves, or links, γ_i, $i = 1, \ldots, n$ in Σ, that meet, if at all, only at their endpoints. Given a graph Γ and a complex, Haar-integrable, function f on $[SU(2)]^n$, consider the functional

$$\Psi_{\Gamma,f}(A) := f(U[A,\gamma_1], \ldots, U[A,\gamma_n])\ . \tag{16}$$

These functionals are dense in L. Obviously, a functional based on a graph Γ can always be rewritten as one based on a larger graph Γ' that contains Γ as a subgraph: it suffice to take f independent from the holonomies of the links in Γ' but not in Γ. Therefore, any two cylindrical functions can be viewed as being defined on the same graph. Taking this into account, a scalar product is defined for any two such functionals by

[6] I identify a vector density E^a and the corresponding 2-form $E = E^a \epsilon_{abc} dx^b dx^c$.

$$\langle \Psi_{\Gamma,f} | \, \Psi_{\Gamma,g} \rangle := \int_{[SU(2)]^n} dU_1 \dots dU_n \, \overline{f(U_1, \dots, U_n)} \, g(U_1, \dots, U_n) \; . \tag{17}$$

$dU_1 \dots dU_n$ is the Haar measure on $[SU(2)]^n$. The scalar product (17) is invariant under the natural transformation of $\Psi(A)$ under $SU(2)$ gauge transformations and diffeomorphisms. The extended Hilbert space $\mathcal{H}_{ext}$ of the quantum theory is obtained by completion. There exist a number of mathematical developments connected with the construction given above. They involve projective families and projective limits, generalized connections, representation theory of C^*-algebras, measure theoretical techniques, and others. See for instance [37,38].

An algebra of well defined self-adjoint field operators is defined in $\mathcal{H}_{ext}$. The trace of the holonomy of A around a loop α,

$$T[\alpha] = \mathrm{Tr} \; U[A, \alpha] \tag{18}$$

is a multiplicative self-adjoint operator. By replacing the conjugate momentum E (a 2-form, we recall) with a functional derivative and integrating it over a 2d surface C in Σ we obtain a self-adjoint Lie algebra valued operator

$$E(C) = \int_C d\sigma^a d\sigma^b \epsilon_{abc} \; \frac{\delta}{\delta A_c(x(\vec{\sigma}))} \quad . \tag{19}$$

$T(\alpha)$ and $E(C)$ are the elementary operators of the theory, in the same sense in which the creation and annihilation operators $a(k)$ and $a^\dagger(k)$ are the elementary operators in conventional quantum field theory. Unlikely $a(k)$ and $a^\dagger(k)$, the operators $T(\alpha)$ and $E(C)$ do not require a background metric to be defined.

The integral $\mathsf{A}(C)$ over the surface C of the $su(2)$ norm of E

$$\mathsf{A}(C) = \int_C |E| \tag{20}$$

is the standard geometrical classical expression for the area of C [39]. The corresponding quantum operator can be constructed on H_{ext}. Since $\mathsf{A}(C)$ involves the square of E, to define it we actually need to regularize the classical expression and to study the limit of the regularized operator as the regulator is removed. Remarkably, the limit is finite and well defined [1]. The resulting operator is self adjoint and has discrete spectrum. The main sequence of the spectrum, restoring physical units, is [1]

$$\mathsf{A} = 8\pi\hbar G \sum_{i=1,n} \sqrt{j_i(j_i+1)} \; , \tag{21}$$

where the (j_i) are an arbitrary n-tuplet of half integers. This result is the source of the loop quantum gravity physical prediction, first suggested in [40] and in [41], that the area is quantized, namely that a Planck scale sensitivity measurement of an area can only yield discrete outputs from (21).

An orthonormal basis that diagonalizes the area operator is given by the *spin network* states [2,42]. Given a graph Γ, embedded in the 3-manifold Σ, the assignment a non-trivial irreducible representation of $SU(2)$, labeled by its spin j_i, to each one of its links γ_i is called a *coloring* of the links. Consider then a node n of the graph, with k adjacent links $\gamma_1, \dots, \gamma_k$, colored as $j_1, \dots, j_k$. Fix an orthonormal basis in the tensor product $H_n = \otimes_{i=1,k} H^{(j_i)}$ of the Hilbert spaces of the $SU(2)$ representations $j_1, \dots, j_k$. The choice of an element N_n of this basis is called a *coloring of the node* n. A (non-gauge invariant) *spin network* $S = (\Gamma, j_i, N_n)$ is a graph embedded in space in which links and nodes are colored. See Figure 1. The *spin network state* $\Psi_S(A)$ is defined by

$$\Psi_S(A) = \bigotimes_{\text{links } i} R^{j_i}(U[A, \gamma_i]) \; \cdot \bigotimes_{\text{nodes } n} N_n \; . \tag{22}$$

$R^j(U)$ is the representation matrix of the group element U in the spin-j irreducible representation of $SU(2)$, seen here as an element in $H^{(j)} \otimes H^{(j)}$, and $\cdot$ indicates the scalar product in $H = \otimes_{\text{links } i \in \Gamma} (H^{(j)} \otimes H^{(j)})$. By varying the graph and the colors we obtain a family of states, which can be easily normalized. As a straightforward consequence of the Peter–Weyl theorem, these states form an orthonormal basis in $\mathcal{H}_{ext}$.

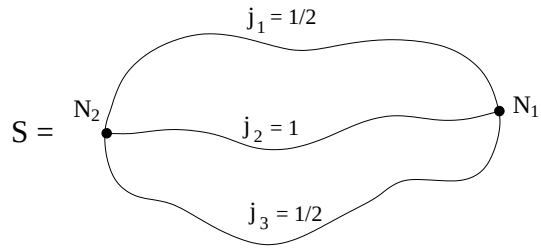

FIG. 1. A simple spin network with two trivalent nodes.

If a surface C cuts the links $\gamma_1 \dots \gamma_n$ of a spin network S, then the spin network state Ψ_S is an eigenstate of the area operator with eigenvalue (21) where the j_i's are the spin associated to the links γ_i. See Figure 2. Therefore a spin network state can be thought as quantum excitation of the metric in which each link carries a quantum of area, proportional to the square root of the Casimir of the representation that colors the link. A similar result holds for the volume [1] (see details in [43]): the discrete quanta of volume are localized on the nodes of the spin network, and depends on the colors of the node.[7]. Thus, spin network states can be seen as elementary quantum excitations of the gravitational field, carrying quanta of volume ("chunks of space") at their nodes, and quanta of area on the links that separate the nodes, or, more precisely, on the surfaces separating the quanta of volume, and which are dual to the links.

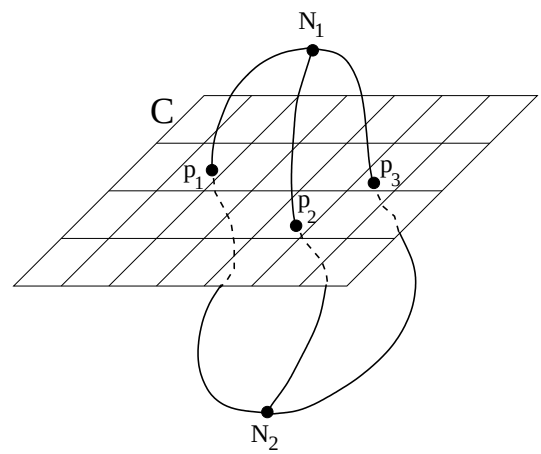

FIG. 2. A spin network S intersecting the surface C.

So far, I have illustrated the kinematics of the theory. The next step is to implement the constraints, namely to define the analog of Equations (11,12). In addition, we have to impose the local $SU(2)$ gauge invariance which is peculiar to the connection formulation of GR. $SU(2)$ local gauge transformations act on a spin network state simply by the $SU(2)$ action on the spaces H_n. By restricting the colors of the nodes to basis elements N_n in the spin zero irreducible component of H_n, we easily obtain the $SU(2)$ invariant subspace $\mathcal{H}_0$ of $\mathcal{H}_{ext}$. Such N_n are called "intertwiners", since they define invariant mappings between $SU(2)$ representations.

$\mathcal{H}_0$ carries a unitary representation $U(Diff)$ of $Diff_\Sigma$. There are no invariant proper states, but using standard generalized states techniques, we can nevertheless define

$$\mathcal{H}_{diff} \sim \frac{\mathcal{H}_0}{Diff_\Sigma} \tag{23}$$

as the Diff invariant subspace of $\mathcal{S}'$ in a Gelfand triple $\mathcal{S}' \supset \mathcal{H}_0 \supset \mathcal{S}$. It is natural to take $\mathcal{S}$ as the space of the finite

[7]The fact that the volume operator vanishes outside the nodes can be intuitively understood as follows: the result of the action of the triad operator, which is a functional derivative on the holonomy is proportional to the tangent of the loop. In the volume element, $\epsilon_{abc}\mathrm{Tr}[E^a E^b E^c]$, we need at least three distinct tangents at a point in order to have a nonvanishing triple product. Thus, we need a node.

linear combinations of spin network states. The spin network basis in $\mathcal{H}_0$ yields a simple description of $\mathcal{H}_{diff}$ and a definition of the Hilbert structure on it. Let an s-knot, or abstract spin network, s be an equivalence class under $Diff(\Sigma)$ of (embedded) spin networks S.[8] A basis in $\mathcal{H}_{diff}$ is given by the states $\langle s|$ in $\mathcal{S}'$ defined by

$$\langle s|S\rangle = \begin{cases} 0 & \text{if} \quad S \notin s \\ 1 & \text{if} \quad S \in s \ . \end{cases} \tag{24}$$

where we have used a Dirac bra-ket notation for the elements of $\mathcal{S}'_0$ and $\mathcal{S}$. Furthermore, one can prove (see [38] and references therein) that observables on $\mathcal{H}_0$ which are self-adjoint (and thus correspond to real classical quantities) and diff invariant (and thus are well defined on $\mathcal{H}_{diff}$) are self-adjoint under the scalar product

$$\langle s|s'\rangle = \begin{cases} 0 & \text{if} \quad s \neq s' \\ c(s) & \text{if} \quad s = s \ . \end{cases} \tag{25}$$

where $c(s)$ is the number of discrete symmetries of the abstract s-knot. This is therefore the appropriate scalar product we need on physical grounds, picked up by the requirement that real classical quantities become self-adjoint operators.

The states $|s\rangle$ are (3d) diffeomorphism invariant quantum states of the gravitational field. They are labeled by s-knots: abstract, non-embedded, knotted, colored, graphs s. As we have seen above, each link of the graph can be seen as carrying a quantum of area, and each node quanta of volume. An s-knot represents an elementary quantum excitation of space: its nodes represent "chunks" of space with quantized volume, separated by "elementary surfaces", dual to the links, with quantized area. The key point is that an s-knots does not live on a manifold. It is not "located somewhere". It is not a quantum excitations *in* spacetime. Rather, it is a quantum excitations *of* spacetime. The quantized space does not reside "somewhere": it itself defines the "where". This is the picture of quantum space that emerges from loop quantum gravity. It is profoundly different from the structure of the states of a weakly local quantum field theory.

The last step in the definition of the theory is the construction of the quantum hamiltonian constraint, namely the rigorous analog of the Wheeler DeWitt equation (11). This is obtained by promoting the classical GR hamiltonian constraint, which in the connection formalism can be written [46] as

$$H[N] = \int N \ \mathrm{Tr}[F \wedge \{A, V\}] \tag{26}$$

into a quantum operator. Here N is a scalar smearing function; F is the curvature of A; $\{\ ,\}$ are Poisson brackets; and V is the volume of Σ. To promote $H[N]$ to an operator, we need first to regularize it. We replace the classical expression (26) by a regularized, ϵ dependent one, $H_\epsilon[N]$, written in terms of quantities that we know how to promote to quantum operators. In particular, F is replaced by the holonomy of an ϵ-size loop. The classical quantities are then replaced by the corresponding quantum operators, leading to the Hamiltonian operator $\hat{H}_\epsilon[N]$. Finally, we study the limit $\epsilon \to 0$: $\hat{H}_\epsilon[N] \to \hat{H}[N]$. This can be done in detail [46], with surprising results.

First, the action of the operator vanishes on the holonomy $U[A, \gamma]$ anytime the smearing function N is zero on the end points of γ [47]. In other words, $\hat{H}$ acts only at the nodes of the spin networks. This can be seen as a consequence of the presence in (26) of the volume. Indeed, as described above, the volume operator vanishes outside the nodes.

Second, the result of the action of the hamiltonian operator on a spin network state turns out to be given by

$$\hat{H}[N]\,|S\rangle = \sum_{\text{nodes } n \text{ of } s} N(x_n)\, A_n\, \hat{D}_n\, |S\rangle \ . \tag{27}$$

x_n is the point in which the node n is located. The action of the operator D_n on the state $|S\rangle$ is given in Fig. 8: the operator acts by creating an extra link which joins two points n_1 and n_2 lying on distinct links adjacent to the node

[8] In fact, by slightly enlarging $Diff_\Sigma$ we can eliminates a moduli space structure in the equivalence classes of the nodes with intersections [44], and obtain a *separable* Hilbert space H_{diff}. On this, see also [45]. (The unconstrained space state H_{ext} is non-separable.)

n [48]. (A sum over all couples of adjacent links is understood. The extra triangular loop that the new link forms is essentially the ϵ-size loop whose holonomy gives the regularization of the curvature F in (26). The coefficients A_n can be explicitly computed [49].

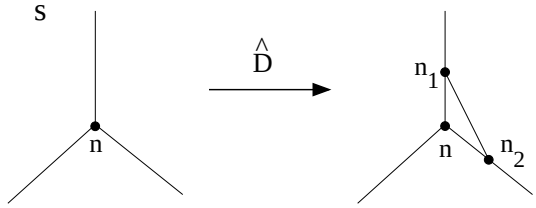

FIG. 3. The action of the Hamiltonian constraint on a trivalent node.

Now, the key point of this construction is that $\hat{H}[N]$ is well defined on $\mathcal{H}_{diff}$. More precisely, the limit in which the regulator is removed makes sense and is *finite* on the diffeomorphisms invariant states, and only on those states. It is here that one sees the deep interplay between general covariance and quantum field theory. What happens is that the size of the triangle in Figure 3, or, equivalently, the precise position of the two new nodes, depends on the regulator ϵ. However, since the action of the operator on a state $\langle s|$ in $\mathcal{H}_{diff}$ is defined by duality, the relevant limit is

$$\langle \hat{H}[N]s|S\rangle \equiv \lim_{\epsilon\to 0} \langle s|\hat{H}_\epsilon[N]S\rangle. \tag{28}$$

But when acted upon by the diff invariant state $\langle s|$, the precise position of the link in $|\hat{H}_\epsilon[N]S\rangle$ is irrelevant, because different positions are related by a diffeomorphism, for ϵ sufficiently small. Therefore the limit (28) turns out to be trivial (constant) [50]. In a precise sense, potential ultraviolet divergences are washed away by diffeomorphism invariance.

This concludes the description of the theory. The theory has been applied, for instance, in black hole physics, leading to a finite computation of the Bekenstein-Hawking entropy of a Schwarzschild black hole [51]. Several aspects of the theory are still poorly understood (low energy limit, general observables). Furthermore, the general lines of the construction of the hamiltonian constraint are understood, but a number of variants are possible, reflecting rather wide quantization ambiguities, and it is not clear which variant, if any at all, yields the physically correct theory, with the right low energy limit. Still, loop quantum gravity provides a construction of a well defined and nontrivial general relativistic quantum field theory.

C. Covariant approaches

1. Topological quantum field theories and the Turaev Viro model

Well defined, although very simple, examples of a covariant formulation of general relativistic quantum field theory are provided by topological quantum field theories (TQFT). Topological field theories are theories in which the number of gauges matches the number of fields, so that all local degrees of freedom are washed away by gauge invariance. If the space topology is non-trivial, a finite number of global degrees of freedom may remain gauge invariant, leaving a non-trivial dynamical theory.

A prejudice hard to die wants any diffeomorphism invariant field theory to be topological, in the sense of having a finite number of global degrees of freedom, unless diffeomorphism invariance is broken. This is wrong, and, as far as we know from GR, the world is described precisely by a diffeomorphism invariant field theory in which diffeomorphism invariance is not broken[9], but the number of degrees of freedom is infinite. These degrees of freedom are "local" in the relational sense: they are localized with respect to each other. Indeed, we can distinguish three kinds of

[9]Of course, we may gauge fix it.

theories. First, there are non-diff-invariant theories like QED. Thy have weakly local degrees of freedom –weaves– interpreted as localized in spacetime (with respect to a reference system). Second, there are theories like GR. These are diffeomorphism invariant, have an infinite number of degrees of freedom –gravitational waves–. These degrees of freedom are relationally local and weakly nonlocal (hence the long historical confusion, now completely over, on whether gravitational waves are "real" or not). Finally, there are topological theories, which are diffeomorphism invariant, and, in addition, have only a finite number of global degrees of freedom.

GR, on the other hand, *is* topological in three spacetime dimensions (there are no gravitational waves in 3d). Quantum GR in 3d has been intensively studied [52–54]. A state sum formulation of a TQFT that yields euclidean 3d GR in an appropriate limit is provided by the celebrated Turaev-Viro model [4]. The Turaev-Viro model can be defined over an arbitrary triangulation Δ of the spacetime 3-manifold. An assignment of an irreducible representation j_e of the quantum group $SU(2)_q$ to each 1-simplex (edges) e of the triangulation is called a coloring c of the triangulation. We chose q a root of unity so that that the number of irreducible representations is finite. The partition function of the model is defined as a sum over all colorings of Δ by

$$Z_{TV} = \sum_c \prod_e \dim(j_e) \prod_t \{6j\}_t(c). \tag{29}$$

$\dim(j_e)$ is the (quantum) dimension of the representation j_e. The second product is over the tetrahedra t of the triangulation. $\{6j\}_t(c)$ is the q-analog of the Wigner 6-j symbol of the six representations assigned to the edges that bound the tetrahedron t. The Wigner 6-j symbol of $SU(2)$ can be computed as the value, for $A = 0$ of the spin network state (22) where the spin network is given by the colored one skeleton of t. The analogue calculation for a quantum group can be done using the Temperley-Lieb recoupling theory techniques developed in [55]. The sum (29) turns out to be independent from the triangulation. All triangulations are connected by a small set of elementary moves, and (29) does not change if we perform an elementary move on the triangulation. The invariance of (29) under these moves follows from the properties of the the Wigner 6-j symbols. In turn, these reflect the fact that the irreducible representations form an *associative* tensor category [56].

The Turaev-Viro model can be defined over a triangulated 3-manifold *with boundary*. We associate a Hilbert space H_Σ to each component Σ of the boundary of the 3-manifold $\mathcal{M}$. This is done as follows. First, associate to Σ a Hilbert space L_Σ, spanned by an orthonormal basis of states $|s\rangle_\Sigma$, where s is a coloring of the triangulation of Σ. Then, consider a 3-manifold bounded by $\Sigma \cup \Sigma'$. Define a linear map between L_Σ and $L_{\Sigma'}$ with matrix elements

$$P_{\Sigma,\Sigma'}(s,s') = {}_\Sigma\langle s|P|s'\rangle_{\Sigma'} = \sum_{c,\partial c = s\cup s'} \prod_t \{6j\}_t(c). \tag{30}$$

The sum is over the coloring of the internal edges only. If $\Sigma{=}\Sigma'$ and $\mathcal{M}$ is the cylinder $\Sigma \times [0,1]$, (30) defines a projector

$$P_\Sigma(s,s') = P_{\Sigma,\Sigma}(s,s') \tag{31}$$

on L_Σ. H_Σ is the kernel of this projector, and is triangulation independent.

In general, the map (30), restricted as a map from H_Σ to $H_{\Sigma'}$ is independent from the triangulation. In fact, this construction defines a functor from the category M whose objects are 2-manifolds and morphism are 3-manifolds with boundaries, into the category H of Hilbert spaces. From this point of view, the projection

$$P : L_\Sigma \longrightarrow H_\Sigma \tag{32}$$

defined by (31) is the standard technique to get a functor from a semifunctor. Atiyah has provided a compelling general definition of TQFT as a functor from M to H [3]. Atiyah's general scheme captures the structure we expect from a general relativistic quantum field theory, and, in particular, from a quantum theory of gravity. Notice that the projection (32) provides precisely the analog of the the Wheeler DeWitt equation. In particular, it represents a realization of Hawking's projection (15) on the solutions of (11), which is also defined on a cylinder. The point is that evolution along the cylinder $\Sigma\times[0,1]$ is the evolution in coordinate time generated by the hamiltonian constraint. This evolution, I recall, is a non-physical gauge transformation in the classical theory. The analogy between quantum gravity and TQFT goes much further than this formal similarity structure: as we shall see in Section III C 4, the solution of the loop quantum gravity version of the Wheeler-DeWitt equation, can be computed by a formula surprising similar to (30).

On the other hand, the axioms of a TQFT in Atiyah's formulation require the spaces H_Σ to be finite dimensional. It is this feature that reflects the topological nature of the theories, and is not compatible with quantum gravity, where we expect the theory to have an infinite number of degrees of freedom and an infinite dimensional state space. The rest of the formal structure of Atiyah's definition of TQFT, on the other hand, reflects only the diffeomorphism invariance of the theory, and it is thus likely to underlie a full quantum theory of gravity as well.

Now, remarkably, in the Turaev-Viro model the states in L_Σ have a natural representation as spin network states. This is the first of a number of structural similarities between TQFT and loop quantum gravity. To see this, consider the *dual* Δ' of the triangulation Δ. Going to the dual triangulation will be a crucial technique below [57]. Δ' is a cellular complex whose 1-cells correspond to the triangles in Δ and whose 2-cells correspond to the edges in Δ. The coloring of Δ induces a coloring of the 2-cells of Δ'. Consider now a connected component Σ of the boundary. The dual of the triangulation of Σ, or, equivalently, the boundary of Δ', is a trivalent graph. A state, namely a coloring of Σ determines a coloring of the links of this graph. This is precisely a (trivalent) spin network. A link carrying the trivial representation is viewed as a non existing link. Recall that L_Σ is spanned by the coloring of the triangulation of the boundary: it follows that L_Σ admits a basis of spin network states.

In the $q = 1$ case the model diverge because there is an infinite number of representations. The divergent sum is the Ponzano-Regge model, a formal quantization of 3d GR constructed in the late sixties [58]), which has inspired most of the later developments. The $q = 1$ model can be also seen as a quantization of a 3d topological field theory, BF theory [59]. The fields of BF theory are a $SU(2)$ connection A, and a $su(2)$-algebra valued 1-form B. The action is

$$S[A, B] = \int \mathrm{Tr}[B \wedge F]. \tag{33}$$

A discretization and path integral quantization of this theory yields (29). Because of the topological aspect of the theory, the discretization turns out not to change the theory itself; that is, no degrees of freedom are lost in the discretization, or, equivalently, the continuum limit of the discretization is trivial. A canonical quantization [52] yields the same quantum theory, and, remarkably, one finds that the spin network states are precisely represented by spin network functionals of the connection [60,61].

2. Four dimensions: the Turaev-Ooguri-Crane-Yetter model

Let us now move to four dimensions. The generalization of the Turaev-Viro model to four dimensions was found by Turaev, Ooguri and Crane and Yetter [5–7,62]. The key idea is to color 2-simplices (faces) f of the triangulation with irreducible representations j_f and to color 3-simplices (tetrahedra) t with intertwiners N_t. One then defines

$$Z_{CY} = \sum_c \prod_f \dim(j_f) \prod_s \{15j\}_s(c) \tag{34}$$

where the second product is now over the 4-simplices s of the triangulation, and the Wigner 6-j symbol is replaced by the 15-j symbol. The Wigner 15-j symbol can be computed as follows. In the *dual* triangulation, the 2 and 3 simplices that bound s correspond to 2-cells and 1-cells. The intersection of these with a ball surrounding s (which in the dual triangulation is a point) is again a spin network. The 15-j symbol is the $A = 0$ value of the corresponding spin network state. The Turaev-Ooguri-Crane-Yetter (TOCY) model is the quantization of 4d BF theory. In 4d BF theory the actions is as in (33), but B is now a two form.

In Section III C 1, I have shown that the states of the Turaev-Viro model can be described as spin networks: a basis of states in the (unconstrained, that is, before the projection) state space L_Σ is given by the colored 1-skeletons of the cellular complex dual to the boundary Σ, and this is precisely a spin network. The same is true for the TOCY model. Indeed, the boundary Σ is now three-dimensional; the colored triangulation of Σ carries spins over its triangles and intertwiners over its tetrahedra. Its dual carries spins over its edges and intertwiners over its nodes. These data define precisely a spin network. Therefore spin networks label states in 3 as well as in 4 dimensions.

Now, the euclidean GR action can be written as

$$S[A, E] = \int \mathrm{Tr}[E \wedge E \wedge F]. \tag{35}$$

where A is an $SO(4)$ connection and E the (inverse) tetrad field, which can be seen as a $SO(4)$ algebra valued 1-form. Comparing with (33), we see that GR can be considered as an $SO(4)$ BF theory plus a suitable constraint, imposing, essentially, the two form B to be the exterior product of two 1-form fields E [63]. It was then natural to search for a formulation of quantum euclidean GR as a (non topological) modification of a $SO(4)$ TOCY state sum model. There are several attempts to do that, leading to some tentative formulations of quantum euclidean GR as state sums of the form (34). In particular, Reisenberger [69] has proposed to directly implement the constraint on appropriate tensor products of the Hilbert spaces on which the irreducible representations are defined. The constraint has an appealing geometrical interpretation as conditions for triangles defined by B (in 4d) to join into tetrahedra [64]. Barrett and Crane [12] noticed that these conditions, in turn, admits a direct interpretation in terms of $SO(4)$ representation theory: they are implemented within an SO(4) Crane-Yetter state sum model simply by (appropriately) restricting the sum to *simple* $SO(4)$ representations.[10] A number of results support the idea that the these models model are indeed related to quantum GR [65,66].

The key problem in these models is the following. In the topological theories, the introduction of a fixed triangulation is justified by the triangulation independence of the quantum theory. Triangulation independence reflects the topological aspect of the theory and the absence of the local degrees of freedom: simply speaking, a finite number of variables suffice to capture all the physical degrees of freedom of the theory. In modifying BF theory to obtain GR, one looses triangulation independence. This is to be expected, since GR has infinite relationally local (although weakly nonlocal) physical degrees of freedom. In this context, a triangulation represents a genuine cut off of the degrees of freedom. Thus, the theory defined over a fixed triangulation cannot be the physical theory one is searching. To get the physical theory, we have either to "sum over all triangulations", or to take a limit "in which the triangulation becomes finer and finer". These limits are poorly understood. Some control over a sum over the sum over triangulations, however, can be obtained from an alternative approach to these models, which I illustrate in the next section.

3. Nonperturbative string theory in 0 dimensions, field theories over a group and summing over triangulations

An intriguing non perturbative and genuinely background independent formulation of 2d quantum gravity was obtained sometime ago in the context of string theory "in zero dimensions". This is the theory obtained by dropping the scalar fields on the string world sheet that represent the location of the string in the target space, and retaining just the 2d metric as a dynamical variable. The resulting theory can be expressed a sum over the geometries of a two dimensional surface, as in (13). This sum can be concretely defined by triangulating the 2d surface with triangles with sides of fixed length, and summing over all topologically distinct triangulations. The number of triangles joining on a vertex determines the local curvature of the manifold at the vertex. Remarkably, the sum over such triangulations can be reinterpreted as the Feynman expansion of the partition function of a quantum theory of matrices with a simple cubic potential [8]. Indeed, the *dual* of a triangulation is a trivalent graph, and can be seen as one of the trivalent Feynman graphs of the cubic matrix theory.

A remarkable extension to 3d of the idea of these matrix models was obtained by Boulatov in [9]. Boulatov considers a field theory over three copies of SU(2), with the action

$$S[\phi] = \int dg_1 dg_2 dg_3 \ (\phi(g_1, g_2, g_3))^2 + \frac{\lambda}{4!} \int dg_1 \dots dg_6 \ \phi(g_1, g_2, g_3)\phi(g_3, g_4, g_5)\phi(g_2, g_4, g_6)\phi(g_1, g_5, g_6). \tag{36}$$

Notice that if we represent the field by a vertex and its three arguments with three edges attached to this vertex, then the second term in the action has the structure of a tetrahedron. Now, if we expand ϕ in modes, harmonic analysis on $SU(2)$ teaches us that the "momenta" of the field ϕ, that is, its modes, are labeled by the irreducible representations of the group. If we express (36) in terms of these modes and then compute the Feynman's perturbative expansion in λ of the partition function

$$Z = \int [D\phi] \ e^{iS[\phi]} = \sum_{\Gamma} \ \lambda^{n(\Gamma)} \ Z_B[\Gamma], \tag{37}$$

[10] Irreducible representations of $SO(4)$ are labeled by two half integers (two spins) $(j', j")$ where $j' + j''$ is integer. A representation is simple if $j' = j"$. Thus, simple representations are labeled by just one spin $j = j' = j"$.

we obtain Feynman graphs Γ (with $n(\Gamma)$ vertices) formed by tetravalent vertices connected by propagators. Each propagator has three indices, carrying momenta, namely $SU(2)$ irreducible representations. These indices are paired across the vertex, and summed over in such a way that they define closed loops, or cycles, along the graph. If we interpret these cycles as defining 2-cells, the Feynman graph is a 2-complex with 2-cells colored by $SU(2)$ irreducibles. Most remarkably, if the 2-complex Γ is the dual 2-skeleton $\Gamma(\Delta)$ of a triangulation Δ, then the sum over momenta

$$Z_B[\Gamma] = \sum_c A[\Gamma, c] \tag{38}$$

is precisely the Turaev-Viro sum over colorings of Δ, with $q = 1$. That is, the possible momenta on $\Gamma(\Delta)$ match exactly the possible colorings on Δ, and each Feynman amplitudes is equal to the corresponding Turaev Viro amplitude.

$$A[\Gamma(\Delta), c] = \prod_e \dim(j_e) \prod_t \{6j\}_t(c). \tag{39}$$

Therefore, as formal series

$$Z_{TV}[\Delta] = Z_B[\Gamma(\Delta)] \ . \tag{40}$$

The same trick works in four dimensions, as realized by Ooguri [6]. The Ooguri theory is a field theory over 4 copies of SU(2). Its action has the structure

$$S[\phi] = \int dg_1 \dots dg_4 \ \ \phi^2 \ + \ \frac{\lambda}{5!} \int dg_1 \dots dg_{10} \ \ \phi^5, \tag{41}$$

where the potential term has now the structure of a 4-simplex. The Feynman expansion of this theory determines a state sum for a triangulated 4d spacetime, which is precisely the $q = 1$ case of the TOCY state sum (34). Again, the theory is, formally, triangulation independent.

Now, the modification introduced into the $SO(4)$ TOCY model in order to obtain GR from BF theory can be implemented directly in the above model [67]. In fact, it is sufficient to replace $SU(2)$ with $SO(4)$ in (41) *and* to constrain ϕ to be invariant under a fixed $SO(3)$ subgroup H of $SO(4)$:

$$\phi(g_1, g_2, g_3, g_4) = \phi(h_1 g_1, h_2 g_2, h_3 g_3, h_4 g_4), \qquad \forall h_i \in H. \tag{42}$$

Remarkably, this constraint implements precisely the restriction of the modes to the simple representations of $SO(4)$, which, in turn, is the quantum implementation of the constraint that reduces GR to BF. Given a triangulation Δ with a dual 2-complex $\Gamma(\Delta)$, the value of the Feynman graph Γ is *precisely* the Barret-Crane partition function over the triangulation Δ. But unlikely in the previous cases, which were topological, and therefore triangulation independent, this time we gain something crucial: the full Feynman expansion of the theory defines precisely a "sum over triangulations", restoring full general relativistic invariance.

The terms in the expansion can be interpreted as a "quantized spacetime geometry". In fact, the interpretation of the links and nodes of the spin network states as carriers of quanta of area and volume extends, as we shall see in the next section, to the spacetime colored triangulations. Thus these models provides a concrete definition of Hawking's sum over geometries. The quantum geometries can be generated as Feynman graphs, as in the 2d quantum gravity models. Thus, in this context, we can view a triangulated spacetime as a term in a Feynman expansion. Alternatively, we can interpret the field ϕ (more precisely, its "Fourier" transform) as a quantum amplitude for the geometry of a tetrahedron (see [64]). Then the quantum field theory can be seen as a "multiparticle theory" for many "tetrahedra", or elementary chunks of space, being created and destroyed in interactions. A spacetime is a Feynman history of creations and destructions of chunks of space.

4. Spin foam models

All the models described above admit a common description as *spin foam models*. This is a surprising and remarkable fact. Let me sketch the general structure of a spin foam model. A spin foam model is a Feynman-like sum over histories,

in which the histories are spin foams. A spin foam σ is a colored 2d complex. A 2d complex is an (abstract) collection of "faces", which join at "edges", which, in turn, join at "vertices". Two 2-complexes are considered distinct if they are combinatorially distinct. A coloring c of a 2-complex is an assignment of spins to the faces and intertwiners to the edges. A spin foam model is determined by choosing a vertex amplitude $A_\nu(c)$, a function of the colorings of faces and edges adjacent to the vertex. The spin foam model is then defined as the state sum

$$Z = \sum_{\substack{\text{spin}\\ \text{foams}\,\sigma}} \prod_{\substack{\text{vertices}\\ v\in\sigma}} A_v \ , \tag{43}$$

or, possibly, including amplitudes of edges and faces as well:

$$Z = \sum_{\substack{\text{spin}\\ \text{foams}\,\sigma}} \prod_{\substack{\text{faces}\\ f\in\sigma}} A_f \prod_{\substack{\text{edges}\\ e\in\sigma}} A_e \prod_{\substack{\text{vertices}\\ v\in\sigma}} A_v \ . \tag{44}$$

If Δ is a triangulation of a manifold $\mathcal{M}$, and Δ' the corresponding dual complex, then the 2-skeleton of Δ' is a 2d complex, which we indicate as $\sigma(\Delta)$. The vertices of $\sigma(\Delta)$ correspond to the the n-simplices of Δ; the edges to the n-1 simplices and the faces to the n-2 simplices. Notice that in the 3d models described above, spins were carried by the edges of Δ, while in the 4d models spins were carried by the triangles of Δ: in both cases, we obtain a spin foam when using the dual description. (In the Turaev-Viro model, edges are trivalent and thus intertwiners are unique, because there is a single normalized invariant tensor between three $SU(2)$ representations). Furthermore, in all models described above, the state sum does not depend on the full combinatorial data of the triangulation, but only on the structure of its n, n-1, and n-2 simplices: that is to say, just on the data that are represented by the corresponding spin foam. Thus, for instance, we obtain the Turaev-Viro model by choosing A_v to be the Wigner 6-j symbol on the vertices that have the structure of the dual of a tetrahedron, and to vanish otherwise. We obtain the TOCY model by choosing A_v to be the Wigner 15-j symbol on the vertices that have the structure of the dual of a 4-simplex, and to vanish otherwise; and so on.

Surprisingly, however, spin foams come from the canonical quarters. Spin foams were first introduced to describe the dynamics of loop quantum gravity, under the name branched colored surfaces, [69]. As I illustrate below, indeed, the covariant formulation of loop quantum gravity yields a partition function which is again a spin foam model. The idea that quantum spacetime could be described in terms of a sum over surfaces had been proposed earlier, in particular by Baez [68], and then by Reisenberger [69], and Iwasaki [70], who realized the importance of 2-complexes. The general notion and the term "spin foam model" were introduced by Baez [10]. The possibility of defining a causal structure over spin foams has also been explored [13]. See [10] and [71] for details and full references.

Now, recall that in all the models described above, irrespectively of the dimension, a basis of (unconstrained) states is labeled by spin networks. Consider the state sum $P_\Sigma(s,s')$ defined in (30,31) over the manifold $\Sigma\times[0,1]$. As discussed, this quantity defines an evolution in coordinate time, as well as the projector on the physical state space. Now, a moment of reflection will convince the reader that in the spin foam formulation, $P_\Sigma(s,s')$ has a remarkable interpretation: it is a sum over "histories" σ of evolutions of the spin network state s' into the spin network state s. That is to say, a spin foam can be seen as the spacetime world-sheet of a spin network. The faces of the spin foam are the world-sheets swept by the links of the spin network and the edges of the spin foam are the worldlines swept by the nodes of the spin network. Vertices are where dynamics happen, precisely as in Feynman diagrams. That is to say, a spin foam vertex can be seen as a "vertex" in the sense of the Feynman graphs of conventional quantum field theory. A spin foam with n vertices represents thus a transition amplitude across n-1 intermediate states, or an n-order term is a perturbative expansion of the transition amplitude.

In the Turaev-Viro theory, for instance, the vertex is the dual of a tetrahedron. Thus, it has four adjacent edges. Consider one of these edges as coming from the past, and three going into the future. Then the vertex represents a process in which a trivalent node of the spin network opens up in three trivalent nodes. See Figure 4. A hamiltonian that could generate such a vertex must thus have precisely the action described in Figure 3, and the vertex amplitude can be seen as a matrix element of this hamiltonian between the initial and final state. But Figure 3 represents the action of the hamiltonian constraint of canonical quantum gravity, which was derived by starting from the ADM constraint and promoting it to an operator! This is a remarkable convergence.

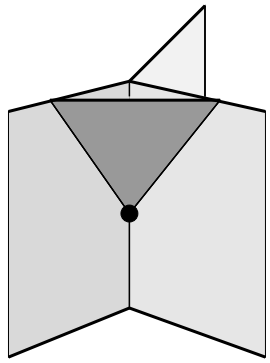

FIG. 4. The elementary vertex.

I now sketch the formal derivation of the spin foam formulation of loop quantum gravity from the canonical theory [14]. Once more, I give here only a very sketchy account of the derivation, and refer to the literature for all details. The problem in canonical quantum gravity is to define the physical Hilbert space $\mathcal{H}_{phys}$, which is the space of the solutions of the hamiltonian constraint, starting from the diffeomorphism invariant Hilbert space $\mathcal{H}_{diff}$ spanned by the s-knot states. Consider the "projector" operator

$$P = \int [dN] \;\; e^{i\hat{H}[N]} \;\; . \tag{45}$$

to be compared with the expression of Dirac's delta as the integral of an exponential. A diffeomorphism invariant notion of integration exists for this functional integral [14,72]. Consider the matrix elements of P in the s-knots basis, and expand the exponent. The expansion has the structure

$$\langle s|P|s'\rangle \sim \langle s|s'\rangle + \int [dN] \; \Big(\langle s|\hat{H}[N]|s'\rangle \; + \langle s|\hat{H}[N]\hat{H}[N]|s'\rangle \; + \ldots \Big) \; . \tag{46}$$

Using now the action (27) of $\hat{H}$ on spin network states, we can compute explicitly the action of the $\hat{H}[N]$ operators. The resulting integrals of the type $\int [dN] \; (N(x_1) \cdots N(x_n))$ can be integrated explicitly, leaving a sum of terms, each corresponding to a sequence of actions of the hamiltonian constraint over an s-knot. The amplitude of each term is essentially the product of the A_n factors in (27), one for each action of $\hat{H}$. Each term can be seen as a history in which the s-knot state $|s'\rangle$ evolves until it reaches $|s\rangle$. The resulting sum admits a graphical interpretation: The sequence of actions of $\hat{H}$ on $|s'\rangle$ can be represented by the spacetime world-sheet swept by s' moving in time and undergoing a discrete transition at each action of $\hat{H}$. This world-sheet is a precisely a spin foam. The faces of the complex are swept out by the spin network links and the edges by the nodes. Faces are colored just as the underlying link, and edges as the underlying node. The transitions generated by $\hat{H}$ given in Figure 3, is represented by the vertex illustrated in Figure 4. Its amplitude is given by the corresponding matrix elements A_n of $\hat{H}$, defined (27). For instance, a term of order one is represented in Figure 5. The 4d "spacetime" in which this evolution takes place corresponds to the classical coordinate spacetime: a mathematical artifact.

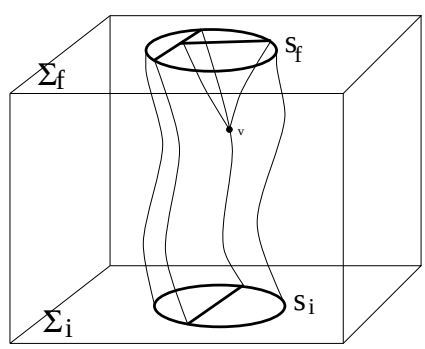

FIG. 5. A first order diagram.

The result is that the expansion (46) of $\langle s|P|s'\rangle$ can be written as a sum over topologically inequivalent *spin foams*

σ, bounded by the initial and final spin networks s' and s. Each surface σ represents the history of the initial s-knot state, and is weighted by the product of coefficients A_v, associated to the vertices of σ. That is, we obtain a spin foam model as in (43), where the vertex amplitude is determined by the matrix elements of the hamiltonian constraint.

The spin foam inherits from the spin networks a geometrical interpretation in terms of quanta of areas and volume, and can be seen as an evolving quantum 3-geometry, that is as a quantum 4-geometry. In fact, a spin foam can be seen as the formalization of Weehler's intuition of the foamy structure of Planck scale geometry [28]. In this picture, the problem of specifying the correct hamiltonian constraint is translated into the problem of finding the right vertex amplitude, 4d general covariance is manifest, and we have the usual advantages of the covariant formalism. In particular, 4d diff-invariant quantum observables can be understood [24] in form more simple and intuitive than in the canonical framework.

Before concluding, it might be instructive to compare the spin foam formalism with the covariant formalism of a bosonic string theory as an integral over surfaces

$$Z = \int [D\sigma_{string}]\ e^{-i\mathsf{A}[\sigma_{string}]}\ . \tag{47}$$

Here σ_{string} is the embedding of the string world-sheet in the target spacetime, and $\mathsf{A}[\sigma_{string}]$ is the area of the string world-sheet, which is induced by the fixed background metric of the target spacetime. The spin foam partition function (43) can be easily rewritten as

$$Z \ = \sum_{\substack{\text{spin}\\ \text{foams}\,\sigma}} \ e^{-i\sum_{\substack{\text{vertices}\\ v\in\sigma}}\ a_v}\ . \tag{48}$$

There is a similarity between (47) and (48). They are both sums over surface configurations, with amplitudes which are exponentials of a local expression on the surface. There are however two crucial differences. The first is that the surfaces in (48) branch off and carry spins, while the bosonic string world-sheets do not. The second, and most important difference is that the action of the string, namely the area $\mathsf{A}[\sigma_{string}]$ depends on the target space metric, and therefore depends on the precise location of σ_{string} in the target space. The sum over surfaces in (47) is thus an integral in which two slightly deformed locations of σ_{string} in the target space count as different. On the contrary, in (48) no manifold background structure enters the action (the exponent), and the weight does not depend on the location of the spin foam in the manifold, but only on its diff-invariant features. Accordingly the sum over surfaces is over diff inequivalent classes only, and it is a sum and not an integral.

It has been suggested, on the other hand, that the background independent, general relativistic, formulation of string theory, whose lack is the most serious open problem in that theory, could look like a spin foam model [74]. For instance, (47) could perhaps be obtained as an approximation of an expression of the form (48), when expanding small fluctuations $\sigma_{fluctuation}$ of σ over a "background" $\sigma_{background}$, representing the background geometry. The area in (47) could then emerge as the result of local diff invariant interactions between $\sigma_{fluctuation}$ and $\sigma_{background}$. Since $\sigma_{background}$ can be interpreted as a 4-geometry and the area is the lowest dimension additive functional for a surface, it is not unlikely that an expression like (47) could emerge from (48).

In conclusion, the picture of the theory as a sum over spin foams is thus common to both loop quantum gravity and the covariant approaches: a common and compelling formalism for general relativistic quantum field theory seems to be emerging from different quarters. It is remarkably different from the formalism of non general relativistic quantum field theory. The spin foam formalism is explicitly diff invariant and background independent. Diff invariance is strictly related to the short scale discreteness of the theory, which is reflected in the formalism by the purely combinatorial nature of (48). In turn, this fundamental short scale discreteness seems to be capable of taking care of the conventional quantum field theory ultraviolet divergences.

IV. CONCLUSION

Hopefully, the picture that I have described and which is emerging from different quarters, some variant of this picture, or maybe a different picture, will lead us to the definition of a consistent quantum general relativistic theory

with general relativity as its classical limit, and thus to a successful conclusion of the twentieth century revolution in fundamental physics.

Such a successful conclusion, in my opinion, is not to be searched in a omni-comprehensive Lagrangian, or in a theory of everything. Rather, it is to be searched in a new conceptual framework for describing the physical world at the fundamental level. A conceptual framework capable of replacing the extraordinary powerful Newtonian framework, but taking into account the deep modification of the basic notions of matter, causality, space and time that represent a major legacy of this tormented century.

The "great" scientific revolution, the seventeenth's century one, was opened by Copernicus' *De Revolutionibus* and successfully concluded by Newton's *Principia*. That is to say, it lasted a century and a half. The current revolution has still a chance to be a bit shorter.

---

[1] C Rovelli and L Smolin, "Discreteness of Area and Volume in Quantum Gravity", Nucl Phys B442 (1995) 593, gr-qc/9411005; Erratum: Nucl Phys B456 (1995) 734.

[2] C Rovelli and L Smolin, "Spin Networks and Quantum Gravity", Phys Rev D52 (1995) 5743, gr-qc/9505006.

[3] MF Atiyah, "Topological quantum field theories", Publ Math Inst Hautes Etudes Sci, Paris 68 (1989) 175; *The Geometry and Physics of Knots*, Accademia Nazionale dei Lincei, (Cambridge University Press, 1990). E Witten, Comm Math Phys 117 (1988) 353.

[4] VG Turaev and OY Viro, "State sum invariants of 3-manifolds and quantum $6j$ symbols", Topology 31 (1992) 865. VG Turaev, "Quantum Invariants of Knots and 3-manifolds" (de Gruyter, New York 1994).

[5] V Turaev, "Quantum invariants of 3-manifolds and a glimpse of shadow topology" in *Quantum Groups*, Springer Lecture Notes in Mathematics 1510, pp 363-366 (Springer-Verlag, New York, 1992); *Quantum Invariants of Knots and 3-Manifolds* (de Gruyter, New York, 1994).

[6] H Ooguri, "Topological lattice models in four dimensions", Mod Phys Lett A7 (1992) 2799.

[7] L Crane and D Yetter, "A Categorical construction of 4-D topological quantum field theories", in *Quantum Topology*, L Kaufmann and R Baadhio eds (World Scientific, Singapore 1993), hep-the/9301062.

[8] F David, Nucl Phys B257 (1985) 45. J Ambjorn, B Durhuus, J Frölich, Nucl Phys B257 (1985) 433. VA Kazakov, IK Kostov, AA Migdal, Phys Lett 157 (1985) 295. DV Boulatov, VA Kazakov, IK Kostov, AA Migdal, Nucl Phys B275 (1986) 641. M Douglas, S Shenker, Nucl Phys B335 (1990) 635. D Gross, A Migdal, Phys Rev Lett 64 (1990) 635; E Brezin, VA Kazakov, Phys Lett B236 (1990) 144.

[9] DV Boulatov, Mod Phys Lett A7 (1992) 1629.

[10] J Baez, "Spin foam models", Class Quant Grav 15 (1998) 1827.

[11] M P Reisenberger, "A lattice worldsheet sum for 4-d Euclidean general relativity", gr-qc/9711052.

[12] J W Barrett and L Crane, "Relativistic spin networks and quantum gravity", J Math Phys 39 (1998) 3296.

[13] F Markopoulou, L Smolin Phys Rev D58:084032 (1998). L Smolin, hept-the/9001022, hep-the/9808192. R De Pietri, "Canonical 'loop' quantum gravity and spin foam models", to appear in the proceedings of the XXIIIth Congress of the Italian Society for General Relativity and Gravitational Physics (SIGRAV), 1998, gr-qc/9903076. J W Barrett and L Crane, "A Lorentzian signature model for quantum general relativity", gr-qc/9904025. J Iwasaki, "A surface theoretic model for quantum gravity", gr-qc/9903122.

[14] C Rovelli: "Quantum gravity as a 'sum over surfaces' ", Nucl Phys B (Proc Suppl) 57 (1997) 28. M Reisenberger and C Rovelli, " 'Sum over Surfaces' form of Loop Quantum Gravity", Phys Rev D56 (1997) 3490, gr-qc/9612035. C Rovelli, "The projector on physical states in loop quantum gravity", Phys Rev D59 (1999) 104015, gr-qc/9806121.

[15] C Rovelli, "Strings, loops and others: A Critical survey of the present approaches to quantum gravity", in *Gravitation and Relativity at the turn of the millennium. Proceedings of the GR-15 conference, IUCAA, Pune, India December 1997* (Inter University center for Astronomy and Astrophysics Pune 1998), gr-qc/9803024.

[16] C Rovelli, "What is observable in classical and quantum gravity?" Class Quant Grav 8 (1991) 297.

[17] C Rovelli, "Halfway Through the Woods: Contemporary Research on Space and Time", in *The Cosmos of Science*, J Earman and J D Norton eds (University of Pittsburgh Press and Universitäts-Verlag Konstanz, Pittsburgh and Konstanz 1997).

[18] C Rovelli, "Quantum spacetime: what do we know?", in *Physics meets philosophy at the Planck scale*, C Callender N Hugget eds (Cambridge University Press, in print) gr-qc/9903045.

[19] C Rovelli, "Time in quantum gravity: an hypothesis", Phys Rev D43 (1991) 442; "Quantum mechanics without time: a model", Phys Rev D42 (1990) 2638.

[20] C Rovelli: "Statistical mechanics of gravity and thermodynamical origin of time", Class and Quantum Grav 10 (1993) 1549; "The statistical state of the universe", Class and Quantum Grav 10 (1993) 1567.

[21] A Connes and C Rovelli: "Von Neumann algebra automorphisms and time versus thermodynamics relation in general covariant quantum theories", Class and Quantum Grav 11 (1994) 2899.
[22] C Rovelli: "Relational Quantum Mechanics", Int J Theor Phys 35 (1996) 1637.
[23] R Haag, D Kastler "An algebraic approach to quantum field theory", J Math Phys 5 (1964) 848. R Haag, *Local Quantum Physics* (Springer Verlag, Berlin 1992).
[24] J B Hartle, "Spacetime Quantum Mechanics and the Quantum Mechanics of Spacetime" in *Gravitation and Quantizations*, Proceedings of the 1992 Les Houches Summer School, ed by B Julia and J Zinn-Justin, Les Houches Summer School Proceedings, Vol LVII (North Holland, Amsterdam, 1995); gr-qc/9304006.
[25] C J Isham, "Quantum Logic and the Histories Approach to Quantum Theory", J Math Phys 35 (1994) 2157, gr-qc/9308006. CJ Isham, J Butterfield, "Some Possible Roles for Topos Theory in Quantum Theory and Quantum Gravity" *Foundations of Physics*, to appear, gr-qc/9910005.
[26] M Tomita, V-th Functional Analysis Symposium of the Math Soc of Japan Sendai (1967). M Takesaki *Tomita's Theory of Modular Hilbert Algebras and its Applications*, Springer Lecture Notes 128 (Springer-Verlag, Berlin).
[27] A Connes, "Une classification des facteurs de type III", Ann Sci Ecole Norm Sup 6 (1973) 133.
[28] J Wheeler, in *Battelle Rencontres 1967*, C DeWitt and J A Wheeler eds (Benjamin, New York, 1968). B DeWitt, Phys Rev D160, 1113 (1967).
[29] SW Hawking, "The Path-Integral Approach to Quantum Gravity", in *General Relativity: An Einstein Centenary Survey*, SW Hawking and W Israel eds (Cambridge University Press, Cambridge 1979).
[30] JB Hartle, SW Hawking, Phys Rev D28 (1983) 2960.
[31] S Mandelstam, Ann Phys 19 (1962) 1. AM Polyakov, Phys Lett 82B (1979) 247; Nucl Phys B164 (1979) 171. YM Makeenko, AA Migdal Phys Lett 88B (1979) 135. Y Nambu, Phys Lett 80B (1979) 372; F Gliozzi, T Regge, MA Virasoro, Phys Lett 81B (1979) 178; M Virasoro, Phys Lett 82B (1979) 436; A Jevicki, B Sakita, Phys Rev D22 (1980) 467; B Sakita, "Collective field theory" in *Field theory in elementary particles*, B Kursunoglu and A Perlmutter eds (Plenum Publishing Corporation, 1983). K Wilson, Phys Rev D10 (1974) 247; J Kogut, L Suskind, Phys Rev D11 (1975) 395; L Susskind "Coarse grained quantum chromodynamics" in *Les Houches XXIX Weak and Electromagnetic Interactions at High Energy*, R Balian and C H Llewellyn-Smith eds (North Holland, Amsterdam).
[32] C Rovelli, "Loop quantum gravity", in *Living Reviews in Relativity*, electronic journal, http://www.livingreviews.org, gr-qc/9710008.
[33] C Rovelli, M Gaul, to appear in the proceedings of the *XXXV Karpacz Winter School on Theoretical Physics: From Cosmology to Quantum Gravity*, Polanica, Poland, 1999. gr-qc/xxxxxxx.
[34] A Ashtekar, *Lectures on non-perturbative canonical gravity* (World Scientific, Singapore 1991).
[35] C Rovelli, "Ashtekar formulation of general relativity and loop space nonperturbative quantum gravity: A Report", Class Quant Grav 8 (1991) 1613.
[36] F Barbero, "Real Ashtekar Variables for Lorentzian Signature Space-times" Phys Rev D51 (1995) 5507, gr-qc/9410014; "From Euclidean to Lorentzian General Relativity: The Real Way", Phys Rev D54 (1996) 1492, gr-qc/9605066.
[37] A Ashtekar, CJ Isham, "Representations of the holonomy algebra of gravity and non-abelian gauge theories", Class and Quantum Grav 9 (1992) 1069. A Ashtekar, "Mathematical Problems of Non-perturbative Quantum General Relativity", in: J Zinn-Justin and B Julia (eds), "Les Houches Summer School on Gravitation and Quantizations," Les Houches, France, 1992 (North-Holland, Amsterdam 1995), gr-qc/9302024.
[38] J Lewandowski, to appear on the proceedings of the XXXV Karpacz Winter School on Theoretical Physics: "From Cosmology to Quantum Gravity," Polanica, Poland, February 2–12, 1999.
[39] C Rovelli: "Area is the length of Ashtekar's triad field", Phys Rev D47 (1993) 1703.
[40] C Rovelli: "A generally covariant quantum field theory and a prediction on quantum measurements of geometry", Nucl Phys B405 (1993) 797.
[41] L Smolin, "Finite, diffeomorphism invariant observables in quantum gravity" Phys Rev D49 (1994) 4028.
[42] L Smolin, "The future of spin networks", gr-qc/9702030.
[43] R De Pietri and C Rovelli, "Geometry Eigenvalues and Scalar Product from Recoupling Theory in Loop Quantum Gravity", Phys Rev D54 (1996) 2664, gr-qc/9602023.
[44] N Grott and C Rovelli: "Moduli spaces structure of knots with intersections", J Math Phys 37 (1996) 3014.
[45] J Zapata, J Math Phys 38 (1997) 5663, Gen Rel Grav 30 (1998) 1229.
[46] T Thiemann, "Anomaly-free formulation of non-perturbative, four-dimensional Lorentzian quantum gravity", Phys Lett B380 (1996) 257; "Quantum Spin Dynamics (QSD)", Class Quant Grav 15 (1998) 839, gr-qc/9606089.
[47] C Rovelli and L Smolin, "Loop representation of quantum general relativity", Nucl Phys B331 (1990) 80.
[48] C Rovelli, "Outline of a general covariant quantum field theory and a quantum theory of gravity", J Math Phys 36 (1996) 6529.
[49] R Borissov, R DePietri, C Rovelli: "Matrix elements of Thiemann hamiltonian", Classical and Quantum Gravity 14 (1997) 2793; gr-qc/97703090
[50] C Rovelli and L Smolin, "The physical hamiltonian in nonperturbative quantum gravity", Phys Rev Lett 72 (1994) 446, gr-qc/9308002.
[51] C Rovelli: "Black Hole Entropy from Loop Quantum Gravity", Phys Rev Lett 14 (1996) 3288; "Loop Quantum Gravity

and Black Hole Physics", Helvetica Physica Acta, 69 (1996) 582; gr-qc/9608032. K Krasnov, "Geometrical entropy from loop quantum gravity" Phys Rev D55 (1997) 3505. A Ashtekar, J Baez, A Corichi, K Krasnov, "Quantum Geometry and Black Hole Entropy", Phys Rev Lett 80 (1998) 904-907.

[52] E Witten "(2+1) dimensional gravity as an exactly soluble system". Nucl Phys B311 (1988) 46.

[53] S Carlip, *Quantum Gravity in 2+1 Dimensions* (Cambridge University Press, Cambridge, 1998).

[54] A Ashtekar, V Husain, J Samuel, C Rovelli, L Smolin, "2+1 quantum gravity as a toy model for the 3+1 theory", Class and Quantum Grav 6 (1989) L185.

[55] L Kauffman, S Lins, *Temperley-Lieb Recoupling Theory and Invariants of 3-Manifolds*, (Princeton University Press, Princeton 1994).

[56] L Crane, D Yetter, "On algebraic structure implicit in topological quantum field theory", Kansas preprint, 1994. D Yetter "State sum invariants of 3-manifolds associated to Artinian tortile categories", Topology and its Applications 58 (1994), 47.

[57] F Markopoulou "Dual formulation of spin network evolution", gr-qc/9704013.

[58] G Ponzano and T Regge, in *Spectroscopy and group theoretical methods in Physics*, F Bloch ed (North-Holland, Amsterdam, 1968).

[59] G Horowitz, "Exactly soluble diffeomorphism invariant theories", Comm Math Phys 125 (1989) 417. M Blau and G Thompson, "Topological gauge theories of antisymmetric tensor fields", Phys Lett B228 (1989) 64. J Baez, "Four dimensional BF theory as a topological quantum field theory", Lett Math Phys 38 (1996) 129. A Cattaneo, P Cotta-Ramusino, J Fröhlich and M Martellini "Topological BF theories in 3 and 4 dimensions", J Math Phys 36 (1995) 6137.

[60] C Rovelli: "Basis of the Ponzano-Regge-Turaev-Viro-Ooguri quantum gravity model is the loop representation basis", Phys Rev D48 (1993) 2702.

[61] TJ Foxon, "Spin networks, Turaev-Viro theory and the loop representation", Class Quant Grav 12 (1995) 951-964, gr-qc/9408013.

[62] L Crane, L Kauffman and D Yetter, "State sum invariants of 4-manifolds", J Knot Theory and Ramifications 6 (1997) 177, hep-th/9409167.

[63] R De Pietri and L Freidel, Class Quant Grav 16 (1999) 2187, gr-qc/9804071. M Reisenberger, Class Quant Grav 16 (1999) 1357, gr-qc/9804061.

[64] A Barbieri, Nucl Phys B518 (1998) 714. L Freidel and K Krasnov, Class Quantum Grav 16 (1999) 351. J Baez and J Barrett, "The Quantum Tetrahedron in 3 and 4 Dimensions", gr-qc/9903060.

[65] J W Barrett and R Williams, "The asymptotic of an amplitude for the 4-simplex", gr-qc/9809032.

[66] L Freidel and K Krasnov, "Spin Foam Models and the Classical Action Principle", Adv Theor Math Phys 2 (1998) 1221.

[67] R De Pietri, L Freidel, K Krasnov, C Rovelli, "Barrett-Crane model from a Boulatov-Ooguri field theory over a homogeneous space", hep-the/9907154

[68] J Baez, "Strings, loops, knots and gauge fields", in *Knots and Quantum Gravity*, J Baez ed (Oxford University Press, Oxford 1994).

[69] M Reisenberger, "Worldsheet formulations of gauge theories and gravity", talk given at the 7th Marcel Grossmann Meeting Stanford, July 1994, gr-qc/9412035.

[70] J Iwasaki, "A definition of the Ponzano-Regge quantum gravity model in terms of surfaces", Journ Math Phys 36 (1995) 6288.

[71] J Baez, "An introduction to spin foam models of BF theory and quantum gravity", to appear in to appear in *Geometry and Quantum Physics*, H Gausterer and H Grosse eds, Lecture Notes in Physics (Springer-Verlag, Berlin), gr-qc/9905087.

[72] T Thiemann, "Kinematical Hilbert Spaces for Fermionic and Higgs Quantum Field Theories", Class Quantum Grav 15 (1998) 1487, gr-qc/9705021.

[73] J C Baez, "Spin Foam Models", Class Quant Grav 15 (1998) 1827, gr-qc/9709052.

[74] L Smolin, "Towards a background independent approach to M theory", hep-the/9808192; "Strings as perturbations of evolving spin-networks", hep-the/9801022.