arXiv:quant-ph/0303147v1 24 Mar 2003

Post-measurement Nonlocal Gates

Daegene Song

National Institute of Standards and Technology,
100 Bureau Drive, MS 8910, Gaithersburg, MD 20899

Abstract

Several proposed quantum computer models include measurement processes, in order to implement nonlocal gates and create necessary entanglement resources during the computation. We introduce a scheme in which the measurements can be delayed for two- and three-qubit nonlocal gates. We also discuss implementing arbitrary nonlocal gates when measurements are included during the process.

Various people have introduced [1, 2, 3] nonlocal gates so that when entanglement resources are provided, one can perform multiple qubit gates on widely separated qubits using only local operations. Using the concept of an entanglement bus, a quantum computer architecture has been proposed [4] to efficiently implement nonlocal gates on a lattice model, allowing only nearest neighbor interactions. However, these nonlocal gates involve measurement processes during the implementation of the gates. If they were to be used during a large-scale quantum computation, a large number of measurements would be required [5]. This will be particularly difficult for systems where measurement time is substantially longer than unitary operation time or the case when measurement errors are greater than errors due to unitary operations. It is therefore desirable to seek a possibility such that all the measurements can be delayed until the end of the computation. As a first step, we introduce a scheme in which measurements can be delayed until the end of the implementation of two- and three-qubit nonlocal gates.

Eisert *et al.* [1] (also in [2]) have discussed the use of classical and entanglement resources for the implementation of nonlocal gates. Here, we would like to consider implementing nonlocal gates on a quantum computer. Since we have a rather reliable classical information processor, we will be concerned mainly with entanglement resources rather than classical information. Firstly, we will review the implementation of nonlocal gates with measurements in the middle of the process. Arbitrary quantum gates on two distant qubits can be performed with two EPR pairs, or ebits, by using teleportation.

Let us take an example to see how it works. As shown in Fig. 1, given two distant localized states $(a|0\rangle+b|1\rangle)_A$ and $(c|0\rangle+d|1\rangle)_B$, we want to perform nonlocal gates between A and B using entanglement resources, in this case, we want to apply CNOT with the control qubit A and target B followed by another CNOT with the control B and target A. We start by teleporting qubit A using an ebit of A_1 and B_1,

$$(a|0\rangle + b|1\rangle)_A(|00\rangle + |11\rangle)_{A_1B_1} \tag{1}$$

by making a Bell measurement on A and A_1. We will omit the normalization factor when the coefficients are equal. Bell measurement can be performed by applying CNOT followed

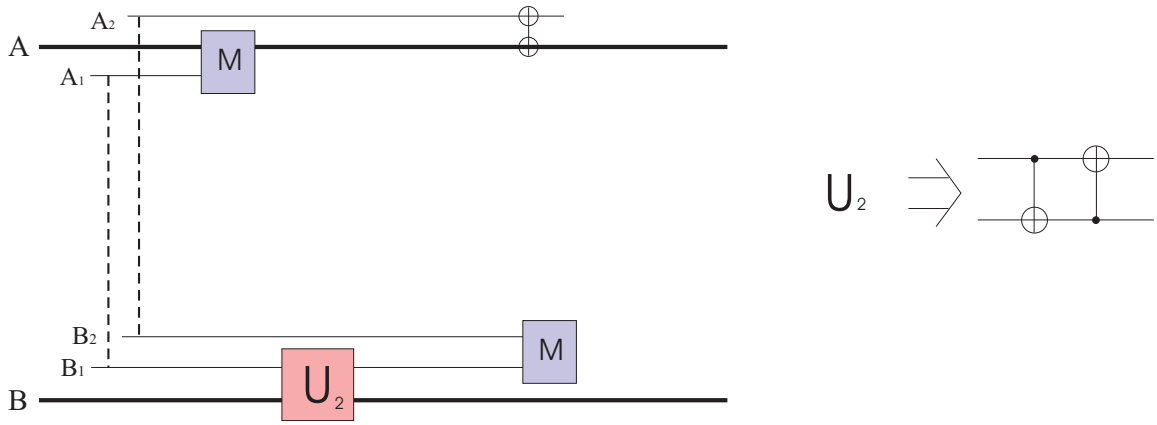

Figure 1: Arbitrary nonlocal two qubit gate, U_2, between A and B using teleportation. Using ebit A_1B_1, A is teleported to B_1. The desired two qubit gate is performed on B_1B, we then teleport B_1 back using ebit A_2B_2 and swap A_2 with A. M refers to the Bell measurement.

by Hadamard gate which transforms, $|\phi^+\rangle \equiv |00\rangle + |11\rangle \rightarrow |00\rangle$, $|\psi^+\rangle \equiv |01\rangle + |10\rangle \rightarrow |01\rangle$, $|\psi^-\rangle \equiv |01\rangle - |10\rangle \rightarrow |11\rangle$ and $|\phi^-\rangle \equiv |00\rangle - |11\rangle \rightarrow |10\rangle$. But we will just use the original Bell basis, $|\phi^\pm\rangle, |\psi^\pm\rangle$, for simplicity. Depending on the Bell measurement result on AA_1, the following correction gates are applied to B_1, $|\phi^+\rangle \rightarrow \mathbf{1}$, $|\psi^+\rangle \rightarrow \sigma_x$, $|\psi^-\rangle \rightarrow \sigma_z\sigma_x$, and $|\phi^-\rangle \rightarrow \sigma_z$, yielding the result $(a|0\rangle + b|1\rangle)_{B_1}$. Next we perform the desired arbitrary local operation on B_1 and B, i.e. $U_2 \equiv \mathrm{CNOT}_{BB_1}\ \mathrm{CNOT}_{B_1B}$. The result becomes,

$$(ac|00\rangle + ad|11\rangle + bc|01\rangle + bd|10\rangle)_{B_1B} \tag{2}$$

We then use another ebit $(|00\rangle + |11\rangle)_{A_2B_2}$ and perform Bell measurement on B_1 and B_2. As before, depending on the results, we apply the same correction gates to A_2. Finally swapping A_2 with A yields the final state we want as in (2) for qubits A and B. It is clear this procedure can be generalized to arbitrary two qubit operations for U_2.

In a similar manner, this can be generalized to n qubit arbitrary nonlocal gates with $2(n-1)$ ebits. We use $(n-1)$ ebits to teleport $(n-1)$ of the qubits near to the nth qubit, and then perform the desired gates on them and teleport each back using another $(n-1)$ ebits.

So far, we've considered the nonlocal gates where measurements were involved in the middle of the process as in previous studies [1, 2]. In the following, we introduce two-qubit and three-qubit nonlocal gates where measurements may be delayed until the end of the gate. We first consider a nonlocal CNOT gate on qubits A and B using the ebit A_1B_1 as follows,

$$(a|0\rangle + b|1\rangle)_A(|00\rangle + |11\rangle)_{A_1B_1}(c|0\rangle + d|1\rangle)_B \tag{3}$$

This can be re-written as

$$\begin{aligned} \{|\phi^+\rangle_{AA_1}(a|0\rangle + b|1\rangle)_{B_1} &+ |\psi^+\rangle_{AA_1}(a|1\rangle + b|0\rangle)_{B_1} \\ +|\psi^-\rangle_{AA_1}(a|1\rangle - b|0\rangle)_{B_1} &+ |\phi^-\rangle_{AA_1}(a|0\rangle - b|1\rangle)_{B_1}\} \times (c|0\rangle + d|1\rangle)_B \end{aligned} \tag{4}$$

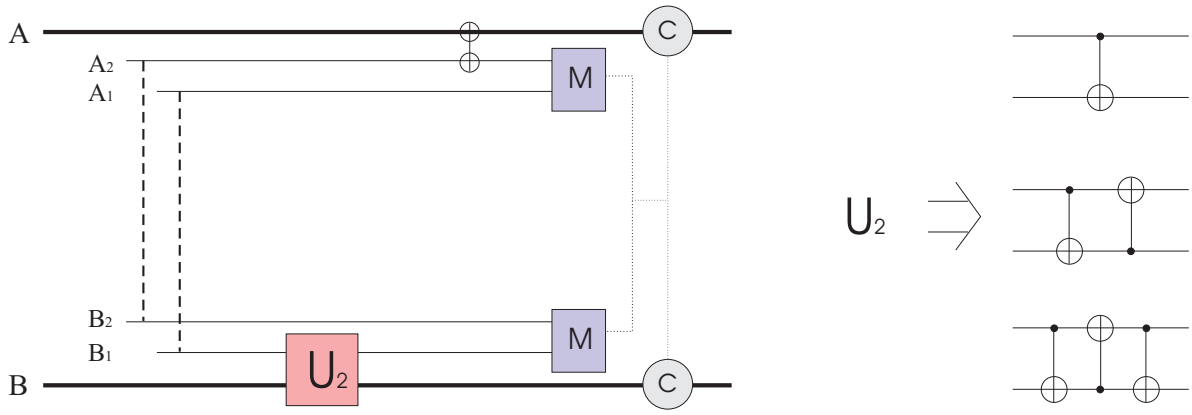

Figure 2: Post-measurement two-qubit nonlocal gate for one, two and three CNOT's. Using two ebits A_1B_1 and A_2B_2, two qubit gates are performed on B_1 and B and A_2 and A are swapped. The measurements are made at the end, and the correction gates dependent on U_2 are applied to A and B.

We start by applying the desired CNOT gate on B_1 and B. Next we use the second ebit $(|00\rangle + |11\rangle)_{A_2B_2}$ as shown in Fig. 2 and swap A with A_2. It now remains to perform two local Bell measurements on B_1B_2 and A_1A_2. The result on B_1B_2 will correct qubit A as $|\phi^+\rangle \to \mathbf{1}$, $|\psi^+\rangle \to \sigma_x$, $|\psi^-\rangle \to \sigma_z\sigma_x$, and $|\phi^-\rangle \to \sigma_z$. Next, the result on A_1A_2 will correct both qubits A and B as follows, $\phi^+ \to \mathbf{1}^A \otimes \mathbf{1}^B$, $\psi^+ \to \sigma_x^A \otimes \sigma_x^B$, $\psi^- \to (\sigma_z\sigma_x)^A \otimes \sigma_x^B$, $\phi^- \to \sigma_z^A \otimes \mathbf{1}^B$.

This procedure can be generalized to other networks of CNOT gates. Let us consider a CNOT gate with control qubit A and target B followed by another CNOT with control B and target A, i.e. $U_2 = \mathrm{CNOT}_{BA}\mathrm{CNOT}_{AB}$. We follow the same network as in Fig. 2 and the result on B_1B_2 will correct just as in a single CNOT gate case. Then the result on A_1 and A_2 corrects again both A and B as follows, $\phi^+ \to \mathbf{1}^A \otimes \mathbf{1}^B$, $\psi^+ \to \mathbf{1}^A \otimes \sigma_x^B$, $\psi^- \to \sigma_z^A \otimes (\sigma_z\sigma_x)^B$, $\phi^- \to \sigma_z^A \otimes \sigma_z^B$. For three CNOT gates, i.e. a swap operation between A and B, the correction gate for A_1A_2 is applied only to qubit B as follows, $\phi^+ \to \mathbf{1}, \psi^+ \to \sigma_x^B$, $\psi^- \to (\sigma_z\sigma_x)^B$, $\phi^- \to \sigma_z^B$. Therefore, for a swap nonlocal gate, the correction gate for A_1A_2 is applied to only qubit B while the correction gate for B_1B_2 is applied to A as before.

Next we consider the case of operations on three qubits. Three arbitrary qubits $(a|0\rangle + b|1\rangle)_A$, $(c|0\rangle + d|1\rangle)_B$, and $(e|0\rangle + f|1\rangle)_C$ with two ebits A_1B_1 and B_2C_2 can be written as

$$\begin{aligned}
\{|\phi^+\rangle(a|0\rangle + b|1\rangle) &+ |\psi^+\rangle(a|1\rangle + b|0\rangle) \\
|\psi^-\rangle(a|1\rangle - b|0\rangle) &+ |\phi^-\rangle(a|0\rangle - b|1\rangle)\}_{AA_1B_1} \otimes (c|0\rangle + d|1\rangle)_B \\
&\otimes \{(e|0\rangle + f|1\rangle)|\phi^+\rangle + (e|1\rangle + f|0\rangle)|\psi^+\rangle \\
&+ (e|1\rangle - f|0\rangle)|\psi^-\rangle + (e|0\rangle - f|1\rangle)|\psi^+\rangle\}_{B_2CC_2} \qquad (5)
\end{aligned}$$

First we study the network $U_3 = \mathrm{CNOT}_{CA}\mathrm{CNOT}_{BC}\mathrm{CNOT}_{AB}$ as shown in Fig. 3. As in the two-qubit case, we apply these three CNOTs on B_1, B and B_2, i.e. $U_3 \equiv$

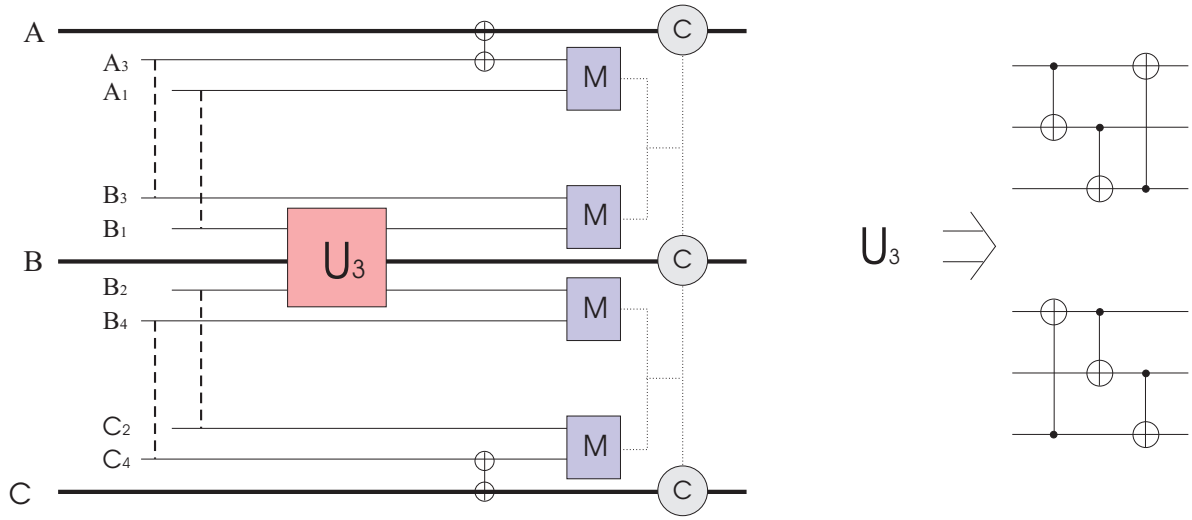

Figure 3: Post-measurement nonlocal three-qubit gate. Here, four ebits are used: A_1B_1, B_2C_2, A_3B_3 and B_4C_4.

	$\|\phi^+\rangle_{C_2C_4}$	$\|\psi^+\rangle_{C_2C_4}$	$\|\psi^-\rangle_{C_2C_4}$	$\|\phi^-\rangle_{C_2C_4}$
$\|\phi^+\rangle_{A_1A_3}$	$\mathbf{1}\otimes\mathbf{1}\otimes\mathbf{1}$	$\sigma_x\otimes\mathbf{1}\otimes\sigma_x$	$\sigma_x\otimes\sigma_z\otimes\sigma_z\sigma_x$	$\mathbf{1}\otimes\sigma_z\otimes\sigma_z$
$\|\psi^+\rangle_{A_1A_3}$	$\mathbf{1}\otimes\sigma_x\otimes\sigma_x$	$\sigma_x\otimes\sigma_x\otimes\mathbf{1}$	$\sigma_x\otimes\sigma_z\sigma_x\otimes\sigma_z$	$\mathbf{1}\otimes\sigma_z\sigma_x\otimes\sigma_z\sigma_x$
$\|\psi^-\rangle_{A_1A_3}$	$\sigma_z\otimes\sigma_x\otimes\sigma_z\sigma_x$	$\sigma_z\sigma_x\otimes\sigma_x\otimes\sigma_z$	$\sigma_z\sigma_x\otimes\sigma_z\sigma_x\otimes\mathbf{1}$	$\sigma_z\otimes\sigma_z\sigma_x\otimes\sigma_x$
$\|\phi^-\rangle_{A_1A_3}$	$\sigma_z\otimes\mathbf{1}\otimes\sigma_z$	$\sigma_z\sigma_x\otimes\mathbf{1}\otimes\sigma_z\sigma_x$	$\sigma_z\sigma_x\otimes\sigma_z\otimes\sigma_x$	$\sigma_z\otimes\sigma_z\otimes\mathbf{1}$

Table 1: Correction gates based on Bell measurements on A_1A_3 and C_2C_4. They are applied to qubits A,B and C for the post-measurement nonlocal three-qubit gate in the Fig. 3 network for the case of $\mathrm{CNOT}_{CA}\mathrm{CNOT}_{BC}\mathrm{CNOT}_{AB}$.

$\mathrm{CNOT}_{B_2B_1}\mathrm{CNOT}_{BB_2}\mathrm{CNOT}_{B_1B}$. Then using two additional ebits A_3C_3 and B_4C_4, we swap A_3 with A and C_4 with C. It then suffices to make Bell measurements on A_1A_3, B_1B_3, B_2B_4 and C_2C_4. For correction gates, B_1B_3 will correct A and C_2C_4 will correct C as usual, $|\phi^+\rangle \to \mathbf{1}$, $|\psi^+\rangle \to \sigma_x$, $|\psi^-\rangle \to \sigma_z\sigma_x$, and $|\phi^-\rangle \to \sigma_z$, respectively. After these corrections, we then correct A, B and C with the result on A_1A_3 and C_2C_4 as shown in the Table 1.

We consider another three-qubit nonlocal gate with $U_3 \equiv \mathrm{CNOT}_{BC}\mathrm{CNOT}_{AB}\mathrm{CNOT}_{CA}$. We follow the same procedure as before and the measurement result on B_1B_3 and B_2B_4 correct A and C respectively as before. The correction gate for A_1A_3 and B_2B_4 is shown in the Table 2.

We have studied some particular networks of CNOT gates for two and three qubits where the measurements were delayed until the end of the gates. Further study on the inclusion of other CNOT gates as well as single-qubit operations in the network is desirable. Moreover, it is as yet unclear whether the measurements can be delayed until the end of not only the gates, but also the whole computation.

	$\|\phi^+\rangle_{C_2C_4}$	$\|\psi^+\rangle_{C_2C_4}$	$\|\psi^-\rangle_{C_2C_4}$	$\|\phi^-\rangle_{C_2C_4}$
$\|\phi^+\rangle_{A_1A_3}$	$\mathbf{1}\otimes\mathbf{1}\otimes\mathbf{1}$	$\sigma_x\otimes\sigma_x\otimes\mathbf{1}$	$\sigma_x\otimes\sigma_z\sigma_x\otimes\sigma_z$	$\mathbf{1}\otimes\sigma_z\otimes\sigma_z$
$\|\psi^+\rangle_{A_1A_3}$	$\sigma_x\otimes\sigma_x\otimes\sigma_x$	$\mathbf{1}\otimes\mathbf{1}\otimes\sigma_x$	$\mathbf{1}\otimes\sigma_z\otimes\sigma_z\sigma_x$	$\sigma_x\otimes\sigma_z\sigma_x\otimes\sigma_z\sigma_x$
$\|\psi^-\rangle_{A_1A_3}$	$\sigma_z\sigma_x\otimes\sigma_z\sigma_x\otimes\sigma_z\sigma_x$	$\sigma_z\otimes\sigma_z\otimes\sigma_z\sigma_x$	$\sigma_z\otimes\mathbf{1}\otimes\sigma_x$	$\sigma_z\sigma_x\otimes\sigma_x\otimes\sigma_x$
$\|\phi^-\rangle_{A_1A_3}$	$\sigma_z\otimes\sigma_z\otimes\sigma_z$	$\sigma_z\sigma_x\otimes\sigma_z\sigma_x\otimes\sigma_z$	$\sigma_z\sigma_x\otimes\sigma_x\otimes\mathbf{1}$	$\sigma_z\otimes\mathbf{1}\otimes\mathbf{1}$

Table 2: Correction gates based on Bell measurements on A_1A_3 and C_2C_4 for $U_3 \equiv \mathrm{CNOT}_{BC}\mathrm{CNOT}_{AB}\mathrm{CNOT}_{CA}$

References

[1] J. Eisert, K. Jacobs, P. Papadopoulos, and M.B. Plenio, Phys. Rev. A, **62**, 52317 (2000).

[2] D. Collins, N. Linden, S. Popescu, Phys. Rev. A, **64**, 032302 (2001).

[3] D. Gottesman and I. Chuang, Nature (2000).

[4] G.K. Brennen, D. Song, and C.J. Williams, *A Quantum Computer Architecture using Nonlocal Interactions*, quant-ph/0301037.

[5] G.K. Brennen, D. Song, and C.J. Williams, in preparation.